Volvo Construction Equipment

R100E

Volvo Rigid Haulers 95.0 t 1 065 hp

A passion for performance

At Volvo Construction Equipment, we're not just coming along for the ride. Developing products and services that raise productivity – we are confident we can lower costs and increase profits for industry experts. Part of the Volvo Group, we are passionate about innovative solutions to help you work smarter – not harder.

Helping you to do more

Doing more with less is a trademark of Volvo Construction Equipment. High productivity has long been married to low energy consumption, ease of use and durability. When it comes to lowering life-cycle costs, Volvo is in a class of its own.

Designed to fit your needs

There is a lot riding on creating solutions that are suited to the particular needs of different industry applications. Innovation often involves high technology – but it doesn't always have to. Some of our best ideas have been simple, based on a clear and deep understanding of our customers' working lives.

You learn a lot in 180 years

Over the years, Volvo has advanced solutions that have revolutionized the use of construction equipment. No other name speaks Safety louder than Volvo. Protecting operators, those around them and minimizing our environmental impact are traditional values that continue to shape our product design philosophy.

We're on your side

We back the Volvo brand with the best people. Volvo is truly a global enterprise, one that is on standby to support customers quickly and efficiently – wherever they are.

We have a passion for performance.

Volvo Trucks

Renault Trucks

Mack Trucks

UD Trucks

Volvo Buses

Volvo Construction Equipment

Volvo Penta

Volvo Financial Services

Drive your costs down

Drive your operating costs down with the all-new Volvo R100E. Built with highly efficient components, the rigid hauler offers long service intervals and component lifecycles. Get the most out of your investment with the fuel-efficient hauler, your partner for all mining and quarrying applications.

Designed for distance

Save time and money with the R100E. The heavy-duty machine is engineered to extend service intervals, helping you cut maintenance costs and optimize uptime. Achieve unbeatable long-term value and longevity of major components with our reliable hauler.

Heavyweight hauler

Go the extra mile with the optimally balanced R100E. Offering a low center of gravity and even weight distribution, the solid machine spreads the load impacts and structural stresses equally across the truck. The outcome is superb machine and tire longevity leading to significantly reduced operating costs. Leave it to Volvo to find the right balance.

Long life, low costs

Component longevity is key to a low cost of operation. That's why your machine is rigorously tested under extreme working conditions to meet high component lifecycles industry standards. Do more in the long haul with the new E-Series rigid hauler promoting, as a standard, two retardation systems for high levels of safe performance, while safeguarding primary brake life.

Volvo Dynamic Shift

Haul it all thanks to our fully automatic adaptive transmission gearshift patterns, further enhanced and payload sensitive if equipped with our On-Board Weighing option. Adapting to varying conditions, Volvo Dynamic Shift delivers productive performance through a smooth, consistent ride and low fuel consumption.

E FOR EFFICIENCY

Move more with less fuel thanks to the latest technology built-into the R100E rigid hauler. The electronic integration between the engine and transmission achieve premium drivetrain performance, resulting in smooth gearshift quality and consistent machine momentum. Reduce your number one operating cost with Volvo.

FULLY LOADED

Offering a true 95-tonne payload, the R100E is designed to do more. Thanks to its optional exhaust-heated V-shaped body, the 60.4 m³ capacity hauler ensures optimum load retention and minimal material carry-back. For long lasting performance, the body is manufactured from high impact and high abrasion resistant steel. Enhance productivity with our 10-10-20 payload profile policy (please ask your local dealer for more detailed information).

Move more, earn more

Meet production targets faster with the largest rigid hauler in the Volvo portfolio. Offering the winning combination of power and performance, the 95-tonne machine hauls more tonnes per hour. Move more and earn more with Volvo.

Move more – faster

Get the job done with the R100E, powered by the premium engine. Delivering high torque capabilities, the combined drivetrain provides unparalleled pulling performance and class-leading rimpull for optimum travel time. Thanks to the fast body-tipping system, you can count on the R100E to achieve fast cycle times for an all-round efficient performance.

Up to the challenge

No terrain is too deep or steep for the R100E. Thanks to the complete drivetrain design and configuration, the hauler yields impressive tractive effort, enabling you to tackle tough job site conditions and navigate gradients effortlessly. With high drive axle multiplication, the machine delivers high levels of rimpull for excellent performance on steep slopes.

Real-time tonnage

Unlock the secret to your hauler's productivity using our optional On Board Weighing (OBW) technology from Volvo. The integrated system ensures the machine moves the optimum safe payload and logs all transported loads for complete production management. Analyze real-time data on the on-board display, which can be remotely monitored via CareTrack™, the Volvo telematics system.

Smart systems

Take your productivity to the next level thanks to smart systems – CareTrack™ and Volvo Site Simulation – for optimum site efficiency and minimal operational costs. To increase the productivity of your existing and future projects, utilize Volvo Site Simulation, which provides valuable information about your machinery, fleet choices and site configuration.

Safety at the center

Safety is built into every design element of Volvo machines – and the R100E rigid hauler is no exception. Featuring a ROPS/FOPS-certified cab, proven safety systems and straightforward service access, the R100E is safe from the inside out.

Solid stability

Featuring a low center of gravity, the rigid hauler is engineered to provide rock-solid stability. Conquer challenging conditions thanks to the expertly designed body and chassis, which work in harmony with the responsive suspension and steering geometry, for ultimate machine stability.

Safety as standard

Rain or shine, know no limits with the Volvo R100E, promoting a transmission retarder as a standard. The proven feature provides excellent safe machine control in all downhill conditions, making it the ideal machine for all your mining and quarrying applications.

Total access

Whether operating or servicing your R100E, gain safe, simple and straightforward entry to the machine using anti-slip steps and secure walkways. From the wide platform or ground level, safely complete essential planned maintenance. For added protection and peace of mind – particularly during servicing – use integral safety locks to isolate the machine system.

Always in control

Operate with complete confidence thanks to a host of safety systems, such as the engine overspeed protection feature, engineered to automatically slow down the machine to within safe operating limits. Machine control is enhanced by the neutral coast inhibitor, which protects the hauler in downhill operations. For added security, the R100E features fail-safe braking and secondary steering systems.

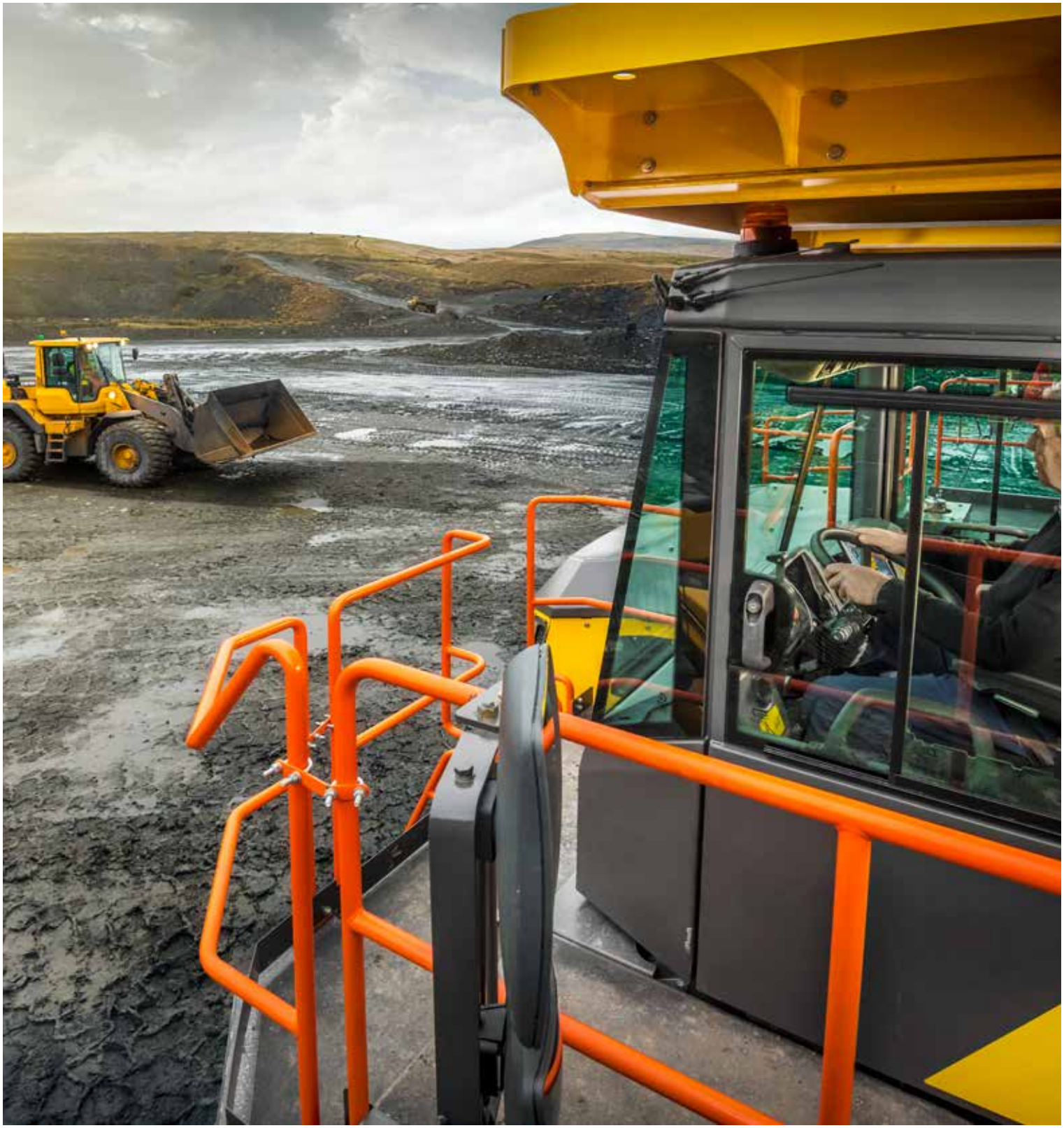

SAFE FROM THE INSIDE OUT

There's no compromise when it comes to safety. That's why all machine systems on the R100E, such as the easily accessible emergency shutdown switches, have been designed and verified to protect the safety of you and your crew. From the ROPS/FOPS-certified cab, experience superb visibility, enhanced by Volvo Smart View, an integrated feature that helps you keep an eye on the surrounding job site traffic.

BUILT READY

The robust and reliable R100E delivers superior, long lasting performance. Engineered with uptime in mind, the heavy-duty hauler is simple and uncomplicated in its design, and purpose-built to achieve optimum productivity shift after shift, day in and day out.

Access more uptime

Access more uptime with the R100E, designed to work for you. The simple and uncomplicated machine design is purpose-built to meet the demands of tough job site conditions. Featuring easy maintenance access, this rigid hauler ensures regular inspections are swift and efficient. Add a range of aftermarket solutions and the result is optimum machine availability.

Ease of serviceability

Ease of access not only optimizes safety, but it also maximizes machine uptime. All service points are strategically grouped and within reach from the ground and service platform. To simplify mechanical servicing, the hauler features common-sized bearings and direct bolt-on wheel rim connections. Inside the cab, access top-level diagnostic data using the operator-friendly dashboard for fast analysis and solutions.

Here to support you

The exclusive Volvo dealer network is here to support you whenever you need it. Volvo offers a number of services, local knowledge and global mining experience, including superb parts availability and telematics machine reports. Speak to your local Volvo dealer for more information about uptime-enhancing solutions, such as Volvo Services Agreements (VSA) and extended warranties.

Durable by design

Built to last, the R100E is durable by design. The high strength, flexible chassis structure and responsive MacPherson strut with lower wishbone connection absorb potentially damaging shocks and vibrations that can occur when operating. Regardless of environmental conditions, you can depend on the hydraulics to remain clean and protected against contamination for optimum machine availability.

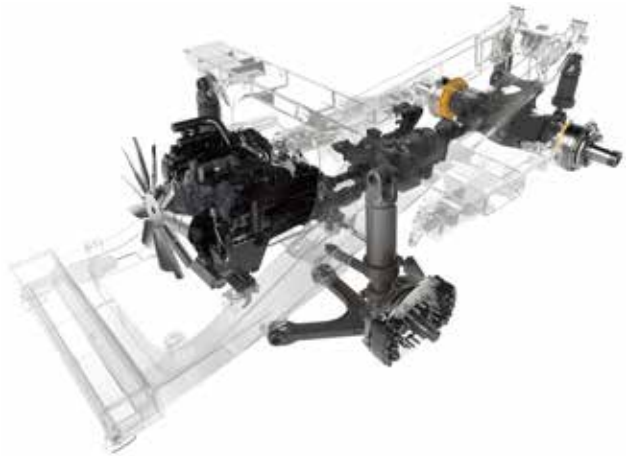

Robust protection

Working in challenging conditions means every component must be protected. With the Volvo R100E, you can rely on a strong design and excellent build quality. Ensure long component lifecycle and machine uptime thanks to the latest generation transmission control system, neutral coast inhibitor and overspeed protection features.

Operator’s choice

Not only a highly efficient machine, the R100E also brings operator productivity to the fore – starting with comfort and control. Offering 360° visibility, responsive steering, ergonomic controls, low noise and solid stability, the Volvo cab is as good as it gets.

Every angle in view

Take on the tough stuff from the comfort of the industry-leading cab, boasting an impressive 360° bird’s eye view of the work zone thanks to Volvo Smart View. The operator seat is located to the left side of the cab, enabling you to observe all surrounding areas. Forward visibility is enhanced thanks to the large windscreen, offering excellent line of sight.

Tailor-made to meet your needs

Customize your comfort for increased productivity throughout the working day. The Volvo air suspension operator seat and tiltable, telescopic steering wheel can be fully adjusted to match your preferred operating position. With the standard Bluetooth enabled audio system, you can stay connected.

Comfortably productive

Get comfortable with doing more in the pressurized Volvo cab, offering all-around visibility, climate control, and ample storage and legroom. From the adjustable operator seat, easily access displays and responsive fingertip controls, ergonomically positioned to keep the focus on the operation.

Low noise, high comfort

Stay focused in the Volvo cab, offering remarkably low noise levels. Built-in sound insulation eliminates distracting noises, while the viscous isolated mounted cab and hydraulic suspension system minimizes ground vibrations and surrounding job site noise. Because a happy, comfortable operator enhances overall productivity and performance.

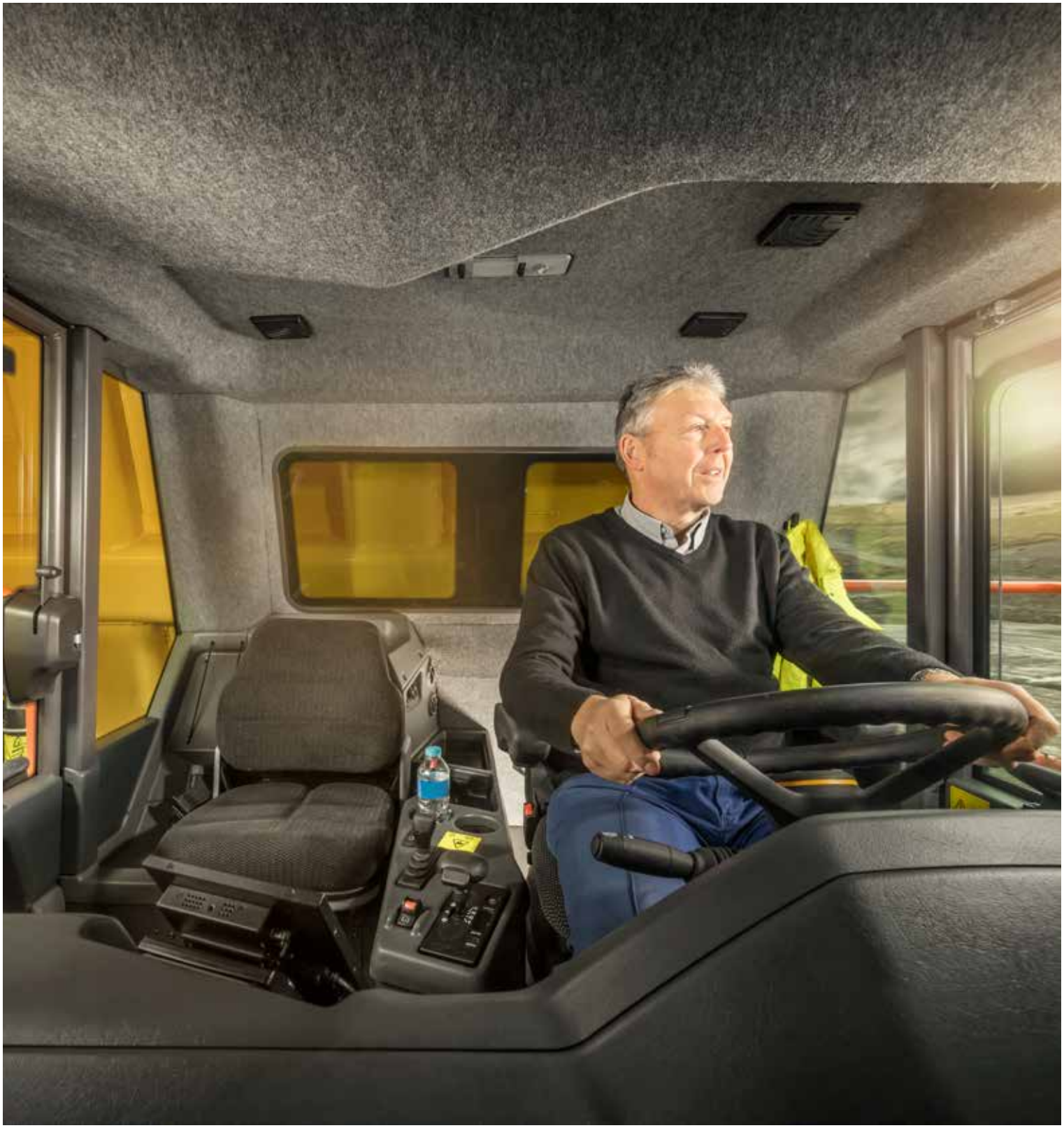

SMOOTH OPERATION

Enjoy superior ride quality and comfort in the robust R100E, equipped with responsive MacPherson strut with lower wishbone connection and viscous-mounted cab for minimal ground impact and vibrations. The responsive, low-effort steering system and geometry, combined with the suspension, optimizes maneuverability by minimizing lean on tight corners. With the R100E, heavy-duty hauling has never felt so easy.

Haul it all

Comfortably productive

The pressurized cab offers superb visibility, climate control, ample space, as well as ergonomic displays and fingertip controls.

E FOR EFFICIENCY

Reduce your number one operating cost thanks to the latest technology built into the R100E rigid hauler.

Robust protection

Ensure long component lifecycle with the transmission control system, neutral coast inhibitor and overspeed protection.

Long life, low costs

The R100E offers a standard transmission retarder, promoting extended service brake life, safety and performance.

BUILT READY

Achieve long lasting performance and uptime thanks to the simple and uncomplicated machine design.

Volvo Dynamic Shift

Haul it all thanks to fully automatic adaptive transmission gearshift patterns, payload sensitive if equipped with On-Board Weighing.

SAFE FROM THE INSIDE OUT

Protect you and your crew with the ROPS/FOPS Volvo cab, featuring easily accessible emergency brake switches and Volvo Smart View.

FULLY LOADED

Offering a true 95-tonne payload, the optional exhaust-heated V-shaped body optimizes load retention and minimizes material carry-back.

Real-time tonnage

Unlock the secret to your hauler's productivity with the OBW system, designed to ensure you shift the optimum safe payload.

Up to the challenge

Navigate gradients with ease thanks to superb tractive efforts offered by the complete drivetrain design and configuration.

SMOOTH OPERATION

Enjoy superior ride quality and comfort thanks to minimal ground impact and vibrations, and easy maneuverability.

Designed for distance

Do more in the long haul with the R100E, offering long component lifecycles and extended service intervals.

Volvo R100E in detail

Engine		
Model		Cummins QST30 CAC, TIER2, 783KW
Type		Electronic controlled, four cycle , direct injection diesel, water cooled, turbo charged and charge air cooled. High-speed Electronic Control Module (ECM) is isolated from detrimental vibration loading. Fully-sealed wiring harness with fail-safe connectors integrates the ECM with the engine sensors for optimized engine performance, monitoring and protection.
Cylinder/configuration		12 / V-Configuration
Displacement	l	30.5
Bore x Stroke	mm	140 x 165
Max. power at	r/min	2 100
Gross power (SAE J1995)	kW	783
	hp	1 065
Net power	kW	726
	hp	987
Max. torque at	r/min	1 300
Gross torque	Nm	4 631
Engine emissions		Meets USA EPA Tier 2/CARB 40CFR 1039 and CARB 40CFR 1068 non-road mobile machinery directive, Stage 2
Electrical		24 volt negative ground. Four 12 volt 220 Ah batteries. Two 9 kW. 100 Amp alternator
Altitude - electronic derate	m	2 500
Steering System		
Primary steering hydraulic pressure is provided by an independent nitrogen charged hydraulic accumulator supplied by a pressure compensating piston pump. The accumulator circuit provides instant, uniform steering response regardless of the engine speed. Pilot operated remote mounted orbitrol control valve delivers light, responsive steering control. Secondary steering is provided by an independent nitrogen charged hydraulic accumulator. The accumulator stored pressure is verified to provide safe navigation of the truck in the event of a primary hydraulic failure. The secondary steering application is independent of any electrical/powertrain source, even if there is a failure of engine, transmission or vehicle electrical system.		
Maximum tire steering angle	°	39
SAE turning radius	mm	11 496
Clearing radius	mm	13 062
Axles		
The rear wheels are driven through a double reduction drive axle. Torque multiplication takes place through the bevel gear differential, then transmitted through fully floating shafts to the planetary reduction gears in the wheel hubs where final torque multiplications takes place.		
Standard		
Differential ratio		2.16 : 1
Planetary reduction		13.75 : 1
Overall drivetrain reduction		29.7 : 1
Optional		
Differential ratio		Traction Bias Differential
Planetary reduction		The automatic spin reducing function is provided by means of a multi-plate friction clutch mounted to one side of the gears in the differential assembly. The 2 side (pinion) gears have a friction link (bias torque) between them which reduces the risk of one wheel spinning freely should the truck encounter slippery or loose ground surface conditions.
Frame		
Fabricated from box-section steel rails with high-strength steel castings in key stress locations absorbing the worksite impacts for long durable lifecycles. The closed 'horse collar' allows for flexibility in the frame to dissipate twists and loads while incorporating a reserve of structural strength well in excess of that required to absorb the stresses imposed by high impact loading and when travelling on uneven, high rolling resistance applications. Fuel and hydraulic tanks suspended mounts off the frame.		
Body		
Tapered profile with longitudinal v-slope floor plate (Double V-type body) that provides excellent center of gravity for load profile stability on all hauling conditions. Manufactured from high abrasion and impact resistant steel (Hardox 400) for superior lifecycle. Horizontal side stiffeners dissipate shock loads across the entire side plate. Mounted on 'floating' pins for minimal structural stress during empty and full transportation. NB. Hardox 400 Specification Body steel 360-440 BHN Body, yield strength 1000 MPa Body, tensile strength 1,250 N/mm2		
Plate thickness		
Floor	mm	20
Sides	mm	10
Front	mm	10
Body volume		
Stuck	m³	41.1
Heaped 2:1 (SAE)	m³	60.4
Tires and rims		
Tires type		27-49
Rims		19.5

Drivetrain		
Transmission		Allison H8610 ORS
Assembly		Planetary gear type transmission with integral torque converter and hydraulic fluid retarder. Electronically controlled connected to engine system via CANBUS. Automatic lock up in all speed ranges. Mounted mid-chassis for ease of access and excellent machine weight distribution.
Electronic control		CEC5
Maximum speed, forward/reverse		
1st gear	km/h	9 / 6
2nd gear	km/h	16
3rd gear	km/h	22
4th gear	km/h	28
5th gear	km/h	37
6th gear	km/h	50
Suspension		
Front: Independent self contained Macpherson type, variable rate (Nitrogen/Oil) suspension struts with lower wishbone. Widely spaced for high levels of machine stability and easy maneuverability. Rear: Independent self contained variable rate (Nitrogen/Oil) - invertly mounted - suspension struts connected to chassis via trailing A-frame and lateral stabilizer bar.		
Maximum front strut stroke	mm	244.6
Maximum rear strut stroke	mm	165.1
Maximum rear axle oscillaton	°	
Brake system		
Fulfills ISO 3450 : 2011 for off-road machinery		
Front brakes type		Independent hydraulic apply, dry disc single caliper. Incorporating independent nitrogen / hydraulic pressure accumulator for instant braking response and reserve pressure.
Front brake diameter	mm	965
Front brakes lining area	cm²	2 015
Rear brakes type		Independent force cooled, oil immersed, multi-disc enclosed brakes. Twin piston, service and park /emergency brake. Emergency brake spring apply / hydraulic release (SAHR Brake). Service piston is used for rear brake retardation for safe machine control.
Rear brake lining area	cm²	87 567
Hoist		
Hydraulic system conforms to ISO 4406		
System relief pressure	MPa	190
Pump output flow rate	l/min	554
at	r/min	2 100
Body raise time	s	11
Body lower time	s	13
Service refill		
Engine crankcase and filters	l	136
Transmission and filters	l	91
Cooling system	l	304
Fuel tank	l	1 290
Steering hydraulic system (total)	l	61
Body hydraulic tank	l	420
Planetaries (total)	l	78
Differential	l	95
Front ride strut (each)	l	34
Rear ride strut (each)	l	36.6
Power take off	l	4
Weights		
Chassis with hoists	kg	53 350
Body standard	kg	16 200
Net weight	kg	69 550
Maximum payload	kg	95 000
Maximum gross weight*	kg	164 550
Weight distribution (axles)		FRT / REAR
- Empty	%	48 / 52
- Loaded	%	33 / 67
*Target gross vehicle weight with options, full fuel tank and target payload.		
Sound Level		
Sound level in cab according to ISO 6396/SAE J2105		
LpA	dB(A)	78
External sound level according to ISO 6395/SAE J2104		
LwA	dB(A)	

Specifications

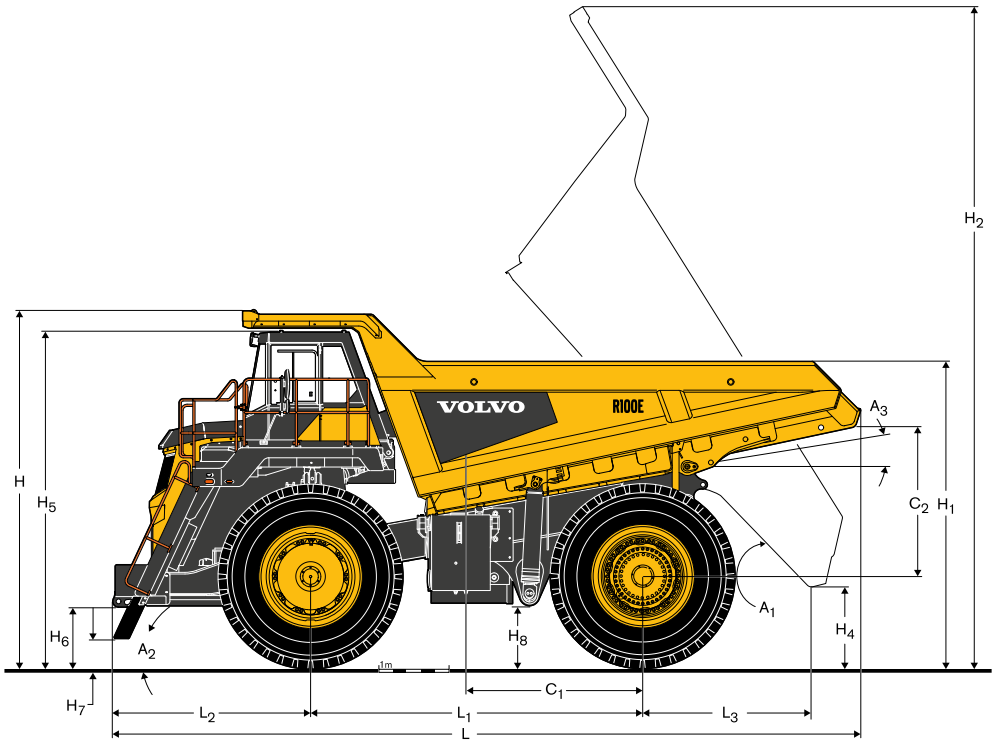

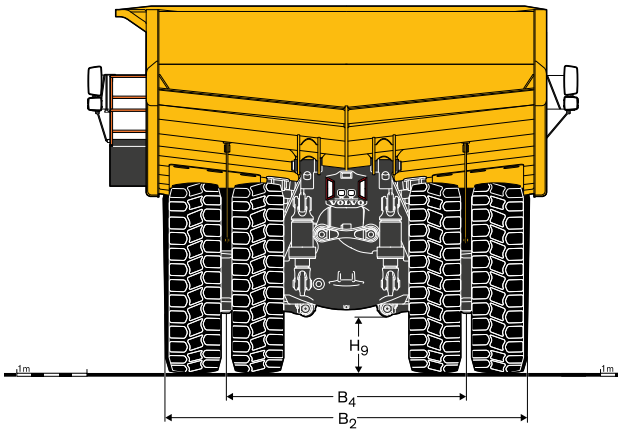

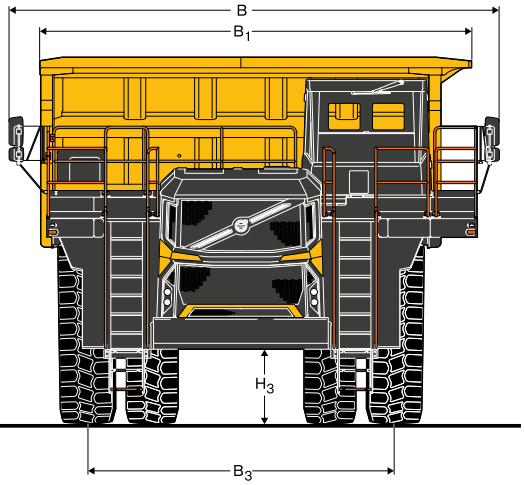

DIMENSIONS

Description		Unit	
H	Overall height	mm	5 070
H1	Loading height	mm	4 380
H2	Raise height	mm	9 576
H3	Front axle ground clerance	mm	675
H4	Tail clearance	mm	1 042
H5	Cab height	mm	4 825
H6	Bumper ground clearance (no TH)	mm	956 (785 to tow hook)
H7	Ladder ground clearance	mm	598
H8	Frame ground clearance	mm	806
H9	Rear axle ground clearance	mm	785
B	Overall width	mm	6 986
B1	Body width	mm	5706 (Not including cab guard)
B2	Rear over tires	mm	5 042 (5 147 at SLW)
B3	Front track	mm	4 403
B4	Rear track	mm	3 420
L	Overall length	mm	10 922

DIMENSIONS

Description		Unit	
L1	Wheel base	mm	4 850
L2	Center front axle to bumper	mm	2 890
L3	Center rear axle to tipped tail	mm	2 440
SAETR	SAE turning radius	mm	11 494
CTR	Clearance turning radius	mm	13 062.4
A1	Body dump angle	°	47
A2	Approach angle	°	22.5 (19 to tow hooks)
A3	Frame angle	°	10
C1	C of G (horizontal) unladen	mm	2 298
C2	C of G (vertical) unladen	mm	764
C1	C of G (horizontal) laden	mm	1 611
C2	C of G (verical) laden	mm	1 952

Vehicle measurements assumptions / variables

Measurements to be taken on flat ground
Truck should be unladen
Bridgestone VRLS Tires should be used
Tire pressure should be set as per manual
Suspension should be set at normal operating height

Equipment

STANDARD EQUIPMENT
Engine
Air cleaner with aspirator (vacuum)
Turbocharged and charge air cooler
Direct drive fan
Electronically controlled with Shift Energy Management (SEM)
Engine safe mode
Fuel filter/water separator
Pre-lube system
Sump guard
Engine enclosures (rubber)
Drivetrain
Full automatic transmission with manual override
Shift Energy Management
Torque converter with automatic lockup
Volvo Dynamic Shift
Double reduction planetaries for increased rimpull
Electrical system
Alternator
Batteries
Battery disconnect switch (tag lock out)
Engine disconnect switch (tag lock out)
Emergency engine shutdown (ground level)
Direction indicators and hazard warning
Lights - side, tail, stop and headlights
LED tail lamps
Power ports - 12V and 24V
Reverse alarm
Reverse lights
CareTrack telematics
Brake system
Hydraulically operated system with independent front and rear control systems
Park brake - electric switch, spring applied hydraulic release
Secondary brake - pedal controlled, modulates rear park brake piston
Retardation - finger tip control of transmission retarder or lever mounted on the steering column giving modulated pressure control of the rear oil cooled brakes
Body
Rock ejectors
Safety
Volvo Smart View
Anti-slip steps and platforms
Body down indicator
Body - operator guard LHS
Body - up locking pins
Body - up reverse to neutral inhibitor
Body - up shift inhibitor
Brakes - independant front and rear systems
Secondary brake foot pedal
Emergency SAHR brake
Battery disconnect switch (tag lock out)
Engine diconnect switch (Tag lock out)
Emergency engine shutdown (ground level)
Cab - ROPS and FOPS
Electro magnetic compatibility
Handrails on steps and platform
Horn
Neutral start inhibitor
Engine overspeed protection
Neutral coast inhibit
Programmable max. travel speed
Operator safety belt
Operator's field of view
Rear view mirrors
Retarder - transmission
Retarder - rear brake
Secondary steering
Instructor's seat with safety belt
Vibration 2002/44/EC
Windscreen washers
Windscreen wipers

STANDARD EQUIPMENT
Comfort
Air suspended seat
Heating, Ventilation and Air Conditioning - HVAC
Interior lights
Radio - Bluetooth
USB power take-off
Cup holder
Insulation thermal and acoustic
Storage compartments
Sun visor
Tilt/telescopic steering wheel
Tinted glass
Operator information interface
MacPherson type front suspension with lower wishbone
Exterior
Mud flaps
Diagnostic terminal
Front and rear tow points
Service and maintenance
Pressure check points
Tires
Standard Bridgestone tires

OPTIONAL EQUIPMENT
Engine
Fast fuel
Clutch engine fan
Drivetrain
Traction bias differential
Inline fuel heater
9000 series transmission
Transmission sump guard
Electrical system
Heated and adjustable electrical mirrors
Remote jump start points
Working light kit
LED headlamps
Cab
Cab heater (-40°C)
Body
Onboard Weighing System
Body Exhaust Heating
Body Extensions upon request
Body liner plates (available with full weight or half weight)
Safety
Fire suppression system
Orange flashing beacon
Service and maintenance
Quick oil drain kit
-40°C Arctic Kit
Central (Beka) autolube
Service light kit
Tires
Bridgestone standard supply
VRLS
VMTS
Michelin tires
XDR2-B
XDT-A4
XKD1A
XDRA

Not all products are available in all markets. Under our policy of continuous improvement, we reserve the right to change specifications and design without prior notice.
The illustrations do not necessarily show the standard version of the machine.