Volvo Construction Equipment
Building Tomorrow

EW240E MATERIAL HANDLER

Volvo Excavators 26.0 t 129 kW

Progress is in our DNA

With nearly two centuries of engineering excellence, Volvo has been at the forefront of the construction equipment industry. Based on a pioneering spirit and great inventiveness, we have always been a driving force in moving technology forward since those early days.

OVER 185 YEARS OF EXPERIENCE

Purpose-built for waste and recycling

Put waste in its place with a full line of products, designed to help you stay efficient and productive. Throughout the years we have listened to your requirements, and our range of features and solutions, built specifically for waste and recycling, confirm our commitment to you.

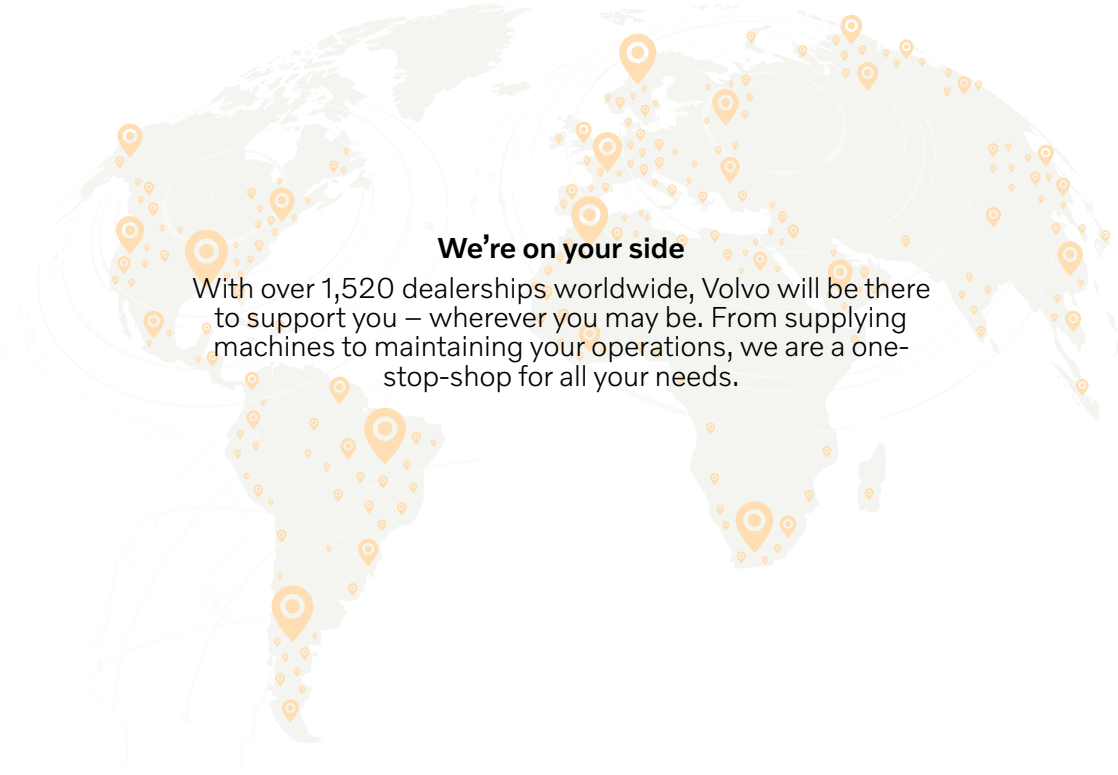

We're on your side

With over 1,520 dealerships worldwide, Volvo will be there to support you – wherever you may be. From supplying machines to maintaining your operations, we are a one-stop-shop for all your needs.

Wholly-built by Volvo

Throughout the decades, Volvo wheeled excavators have proven to be multi-purpose and reliable machines. Built on experience and the proven EW210D MH concept, comes our best material handler yet – the EW240E Material Handler. Specifically designed for waste and recycling industries and manufactured in the Volvo factory, this machine offers all the tested features from our previous excavators – and much more.

Comfort Drive Control

New for the Volvo wheeled excavator range, Comfort Drive Control gives you the opportunity to control the machine using only the joystick, up to 20km/h. As an option, you can order the machine without the steering column, to boost further visibility.

Volvo boom and arm

Lift with precision using the redesigned boom and arm. The boom cylinder dampening minimizes shaking and holds the grapple in place, for enhanced stability. The machine is equipped with an arm in limitation, designed to prevent collision between the cab and the grapple. As an extra safety feature when working indoors, Volvo offers the optional height limitation function.

Smooth control

Experience instant response, thanks to the optimized hydraulics system and new specific joystick, providing you with an array of functions at your fingertips. The grapple control and soft swing braking system work in harmony for improved accuracy during simulatenous operations.

When our operators are working 12-hour shifts in the machines, we want to make sure they're comfortable. Their preference always lies with Volvo machines over any other brand.
Clint Liddelow, C-Wise, Australia

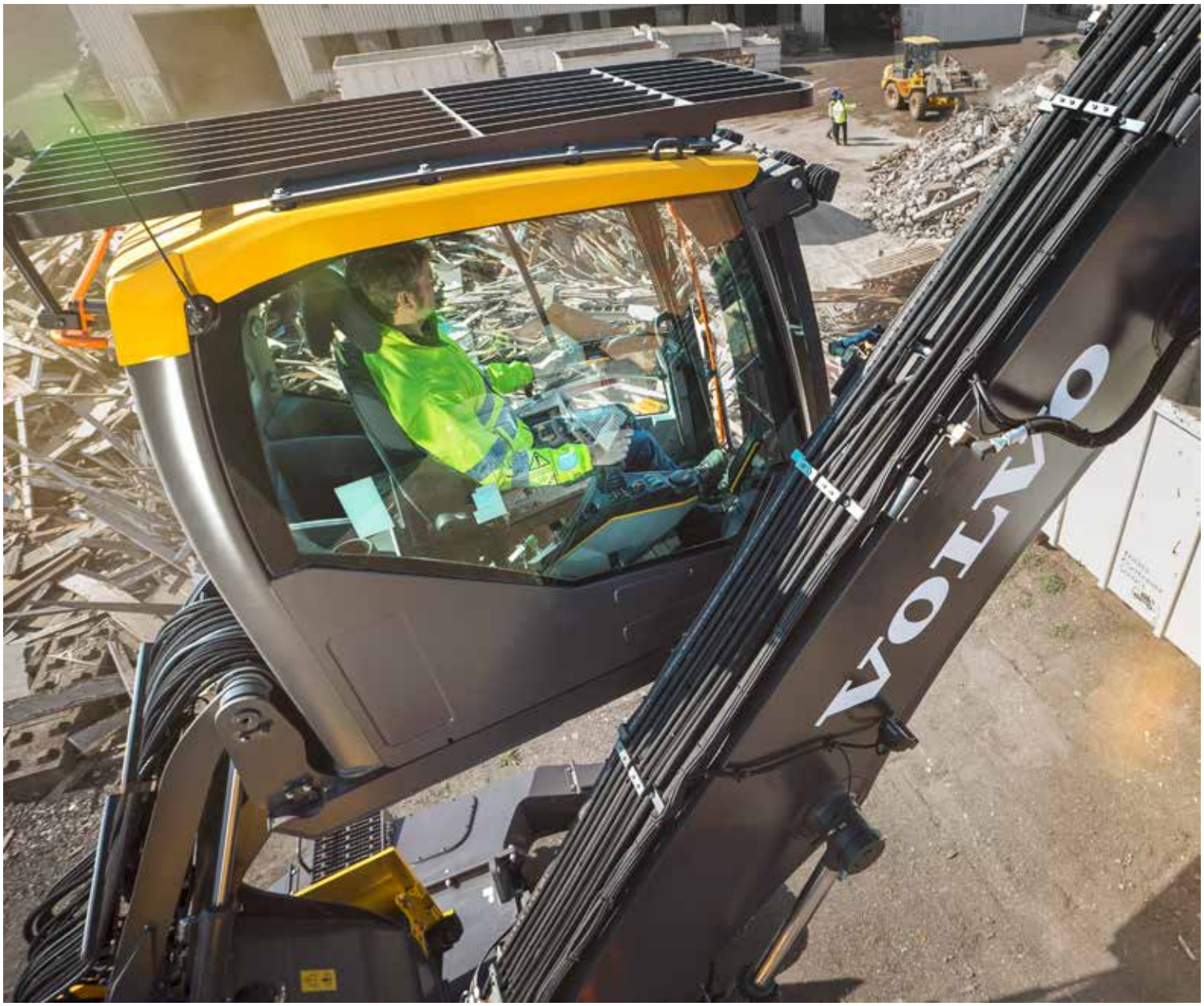

OPERATORS CHOICE

Work in comfort in the spacious Volvo cab, which can be raised to lift you up to five meters above the ground, for an eye-level view. For smooth operation when working at height, the double damped cushioning reduces vibrations and noise. You can now raise the cab and move the outriggers directly from the redesigned joysticks.

Over the years we have owned just about every kind of excavator known to man. But a Volvo machine offers the best value for money, and has always suited our needs best.
Mark Riffel, BN Steels & Metals, Canada

CONFIGURED YOUR WAY

To enhance productivity, configure your machine both inside and out, and have it delivered to you straight from the factory. For increased visibility, you can fit your machine with Volvo Smart View or a one-piece polycarbonate window, with protection film. Additionally, you can select from a gooseneck arm or sorting/grab arm, to ensure you always have the best grasp on the job.

Designed by you, built by Volvo

To make sure our machines reflect what the market wants and needs, we have involved customers at every stage of development. The EW240E Material Handler has been rigorously tested at customer sites, to achieve optimum real-world performance. With a range of compatible attachments and available configurations, you have the power to enhance versatility and design a machine to specifically match your application.

Versatility

From waste handling to scrap sorting, you can maximize your machine's productivity with a range of durable grapples – available to you through the Volvo factory. To facilitate easy operation, the Attachment Management System stores the settings for up to 20 different attachments, getting you back to work as fast as possible.

Power up, fuel down

Move more with less. The powerful Volvo engine delivers 129 kW (173 hp) and is equipped with auto idle and auto engine shutdown functions, to reduce fuel consumption. ECO mode turns on automatically to maintain productivity and increase fuel efficiency.

From strong to stronger

Optimize machine uptime and the profitability of your business with the EW240E Material Handler, rigorously tested and proven to withstand the test of time. Built on experience, this machine will always perform dependably, keeping productivity high and downtime low.

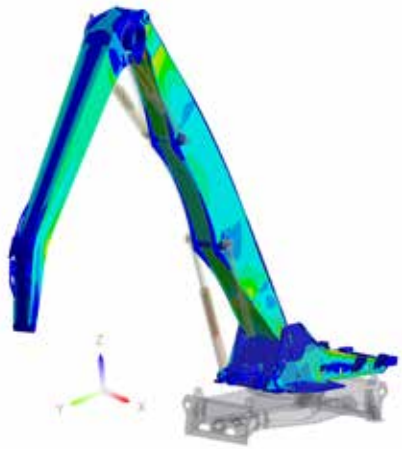

Power up, fuel down

ECO mode, auto idle and optional auto engine shut down turn on automatically to reduce fuel consumption and machine wear.

Comfort Drive Control

Control the machine using only the joystick. As an option, you can order the machine without the steering column.

Volvo boom and arm

For enhanced stability, the boom cylinder dampening minimizes shaking and holds the grapple in place.

Factory-installed auxiliary lines

Unlock machine potential with factory-installed auxiliary circuits to power your grapples.

CONFIGURED YOUR WAY

Choose from an array of options including one-piece single window, Volvo Smart View and gooseneck arm or sorting/grab arm.

Built for the job

Designed and tested in the toughest conditions, the machine is built with a powerful Volvo D6 engine and load sensing hydraulics.

Smooth control

The specifically designed joystick and soft swing braking system work in harmony, for improved accuracy in simulatenous operations.

Made in Germany

Designed, made and tested in Germany, the EW240E Material Handler is perfect for use anywhere in the world.

Versatility

Maximize your machine's productivity with a range of sorting grabs or peel grapples.

Made for material handling

OPERATORS CHOICE

Integrate your joysticks with some additional functions, giving you the ability to raise the cab and move the outriggers from one control.

Service made easy

For fast maintenance, greasing points are grouped together and all filters are located behind the engine door.

Easier machine access/egress

Get in and out of the cab safely thanks to newly added steps on the outriggers.

Our Volvo loaders and excavators are used in just about every area on the site. They sort and stack the heavy materials, load trucks, feed crushers and hoppers, and load boats. We couldn't do our job without them.
Alexander Pouw, Pouw Group, Netherlands

DO MORE JOBS WITH JUST ONE MACHINE

Boost your machine's productivity with a range of compatible attachments, available straight from the Volvo factory. You also have access to a range of Volvo Services, designed to secure maximum return on investment. From Genuine Volvo Parts and Volvo service technicians, to proactive machine monitoring and operator training – everything is available from one place.

VOLVO
VOLVO

VOLVO
VOLVO

Volvo EW240E Material Handler in detail

Engine

Volvo Construction Equipment is ready to comply with the tough new EU Stage V legislation for off-road vehicles with the introduction of a cascade of innovations in its new generation engines with Volvo Advanced Combustion Technology (V-ACT).
Volvo machines are equipped with in-line turbo charged diesel engine with high pressure common rail system. The engine features a externally cooled exhaust gas re-circulation (E-EGR) , a Diesel Particulate Filter (DPF) and a Selective Catalytic Reduction(SCR) with AdBlue®/Diesel exhaust fluid (DEF).

Engine	Volvo	Volvo D6J
Max. power at	r/min	1 800
Net (ISO9249/SAEJ1349)	kW	126
	hp	171
Gross (ISO 14396/SAE J1995)	kW	129
	hp	175
Max. torque	Nm	850
at engine speed	r/min	1 350
No. of cylinders		6
Displacement	l	5.7
Bore	mm	98
Stroke	mm	126

Electrical system

Voltage	V	24
Batteries	V	2 x 12
Battery capacity	Ah	2 x 140
Alternator	V/Ah	28 / 120

Swing system

The superstructure is slewed by the means of a axial motor with reduction gear box.
Automatic slew holding bake and anti-rebound valve are standard.

Max. slew speed	r/min	8
Max. slew torque	kNm	54

Undercarriage

Oscillation	± °	4.5
Twin wheels	type	10-20 or 11-20
Tractive force (net)	kN	121
Travel speed, off road	km/h	20
Travel speed, creep	km/h	3.2
Min. turning radius	m	8.1

Travel speeds may depend on to local regulations

Cab

Refrigerant of the type R134a is used when this machine is equipped with air conditioning. Contains fluorinated greenhouse gas R134a, Global Warming Potential 1.430 t CO2-eq.

Sound Level

Sound pressure level in cab according to ISO 6396

L_{pA}	dB	67

External sound level according to ISO 6395 and EU Noise Directive 2000/14/EC

L_{WA} (standard)	dB	101
L_{WA} (tropical)	dB	102

Brake system

Service brakes: servo-hydraulically manoeuvred self-adjusting wet multidiscs with two separate brake circuits.
Parking brake: negative wet disc in gear housing, spring applied and pressure released.
Digging brake: service brake with mechanical lock system.
Security system: The 2-circuit travel brakes are supplied with two accumulators in the event of failure in the service brake system.

Hydraulic system

Closed-centre load sensing hydraulic system with pressure compensated valves. Load independence of movements. Flow sharing feature, combined with a high flow pump (power regulation). The system gives superior manoeuvrability and fast movements, for optimal working result and economy
The following working modes are included in the system:
Parking mode (P): Parking position for optimal safety.
Travel mode (T): Engine speed is controlled by travel pedal stroke for low fuel consumption and noise.
Working mode (W): Full working flow with adjustable engine rpm for normal working and best speed utilisation.
Customer mode (C): Operator can set proper oil flow in accordance with job conditions.
Power Boost: All digging and lifting forces are increased.

Main pump (type low noise axial piston pump)		
Max. flow	l/min	375
Brake + steering pump (type low noise gear pump)		
Max. flow	l/min	48
Servo pump (type low noise gear pump)		
Max. flow	l/min	15
Relief valve setting pressure		
Implement	MPa	35
Travel system	MPa	35
Slew system	MPa	23
Pilot system	MPa	3.5

Total Machine Weights

With straight boom, with gooseneck arm 5 m, with solideal twin tyres 10-20, with grapple 600 l (1 600 kg)		
With front and rear outriggers	kg	26 000
With straight boom, with sorting arm 4 m, with solideal twin tyres 10-20, with sorting grap with Quick coupler (1 500 kg)		
With front and rear outriggers	kg	25 900

Service Refill

Fuel tank	l	290
DEF/AdBlue® tank	l	25
Hydraulic system, total	l	340
Hydraulic tank	l	170
Engine oil	l	25
Engine coolant	l	33
Swing reduction unit	l	7
Transmission	l	2.5
Axle differential:		
Front axle	l	16
Rear axle	l	20

Specifications

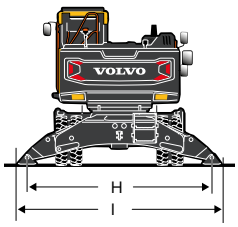

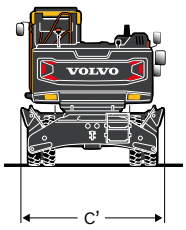

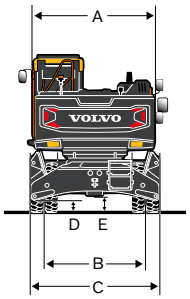

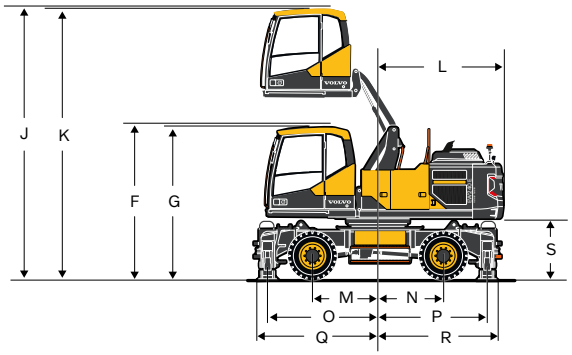

DIMENSIONS			
A	mm	2 540	
B	mm	2 114	
C	mm	2 700	
C'	mm	2 950	
D	mm	250	
E	mm	351	
F (with FOPS)	mm	3 274	
G	mm	3 224	
H	mm	3 862	
I	mm	4 257	
J (with FOPS)	mm	5 773	
K	mm	5 723	
L	mm	2 624	
M	mm	1 375	
N	mm	1 375	
O	mm	2 310	
P	mm	2 290	
Q	mm	2 536	
R	mm	2 515	
S	mm	1 310	
		Straight boom 6.5 m	
		Gooseneck arm 5.0 m	**Sorting arm 4.0 m**
T	mm	5 434	5 481
U	mm	2 810	2 857
V	mm	2 624	2 624
W	mm	9 527	9 526

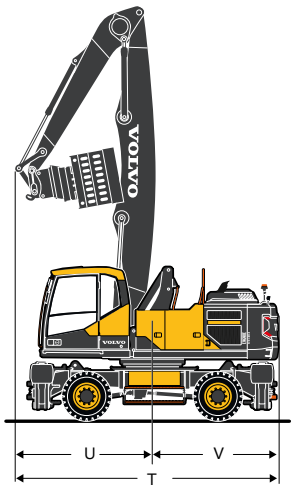

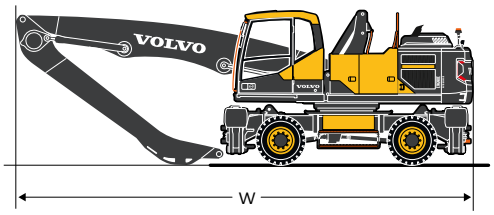

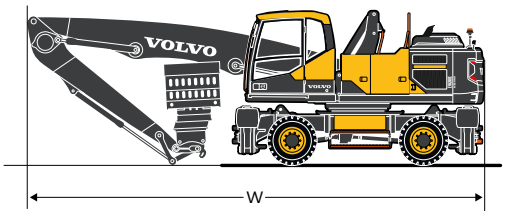

Specifications

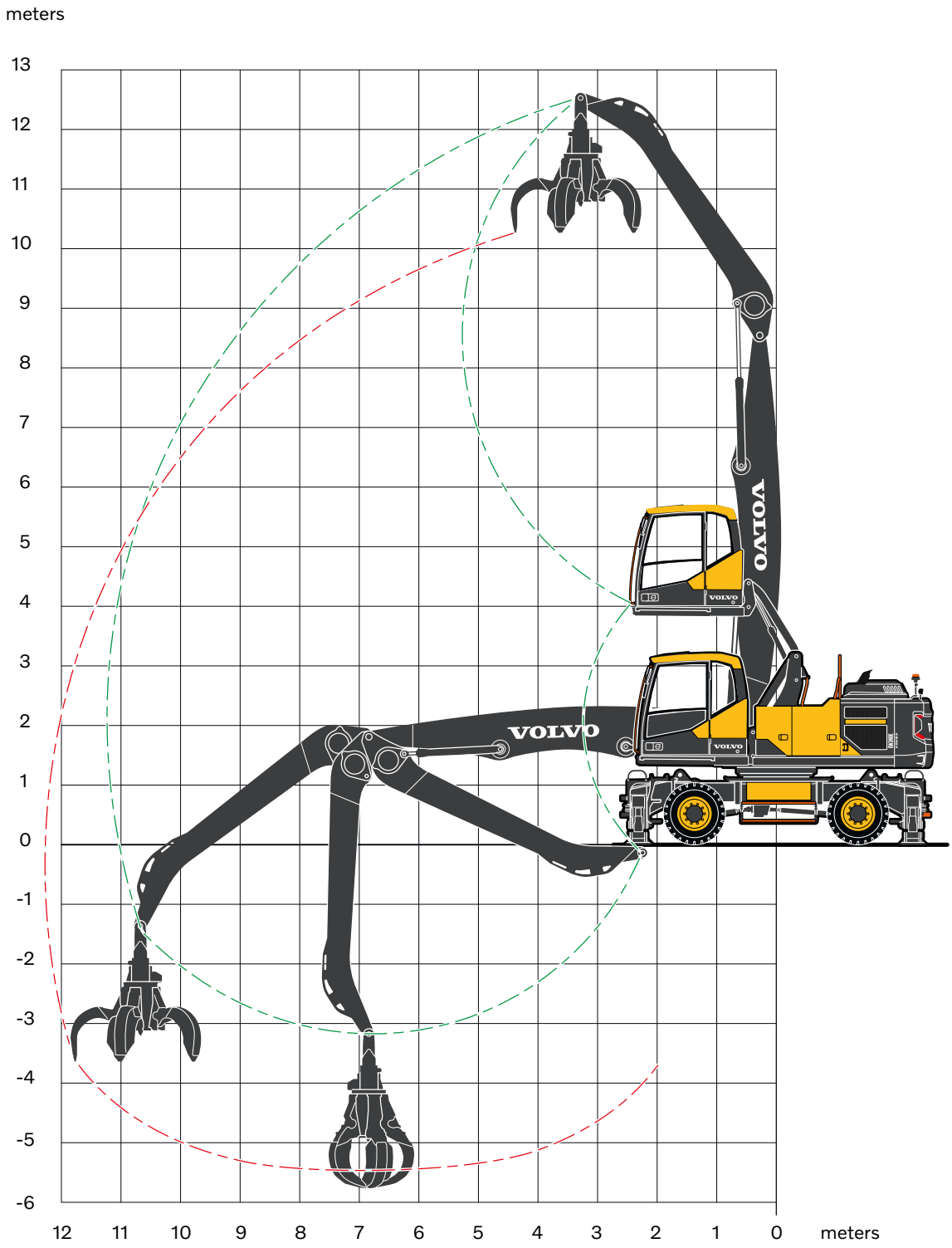

ORANGE PEEL GRAPPLE/POLY GRAB		
With poly grapple on gooseneck arm		
Width (closed)	mm	1 520
Opening width	mm	2 130
Height (closed)	mm	1 980
Volume	l	600

Recommended attachments

ORANGE PEEL GRAPPLE/POLY GRAB

Lifting capacity at maximum reach with support down according ISO 10567: 3 400 kg

Grapple suspension, weight: 120 kg

Volume	Weight (grapple only)	Max. load capacity	Weight including H-Suspension	Maximum material density
l	kg	kg	kg	t/m³
450	980	7 000	1 100	5.0
600*	1 580*	7 000*	1 700*	2.8*
800	1 580	7 000	1 700	2.1

Note: The sizes and weights marked with an asterisk (*) are recommended.

LIFTING CAPACITY EW240E MATERIAL HANDLER

At the arm end without grapple. For lifting capacity including grapple, simply subtract actual weight of this part from the following values.
Unit: 1 000kg
Notes: 1. Working pressure = 35 MPa. 2. The above values are in compliance with ISO standard 10 567. They do not exceed 87 % of hydraulic lifting capacity or 75 % of tipping load, with the machine on firm, level ground. 3. Load capacities marked with an asterisk (*) are limited by machine's hydraulic lifting capacity rather than tipping load.

Straight boom 6.5 m
Gooseneck arm 5.0 m
Front and rear outriggers

Lifting point	Reach from machine centre (u = support up/d = support down)											
	3.0 m				4.5 m				6.0 m			
	Across UC		Along UC		Across UC		Along UC		Across UC		Along UC	
m	u	d	u	d	u	d	u	d	u	d	u	d
12.0	-	-	-	-	6.8*	6.8*	6.8*	6.8*	-	-	-	-
10.5	-	-	-	-	-	-	-	-	5.0	6.3*	6.3*	6.3*
9.0	-	-	-	-	-	-	-	-	5.1	6.0	6.0	6.0
7.5	-	-	-	-	-	-	-	-	5.0	6.1	6.1	6.1
6.0	-	-	-	-	-	-	-	-	4.9	6.4	6.4	6.4
4.5	-	-	-	-	7.2	8.7	8.7	8.7	4.6	7.0	6.2	7.0
3.0	-	-	-	-	6.4	10.1	9.0	10.1	4.3	7.7	5.9	7.7
1.5	-	-	-	-	5.8	11.3	8.3	11.3	3.9	8.2	5.5	8.2
0.0	3.4	3.4	3.4	3.4	5.3	10.4	7.8	10.4	3.7	8.2	5.2	8.3
-1.5	-	-	-	-	5.1	9.1	7.6	9.1	3.5	7.9	5.1	7.9
-3.0	-	-	-	-	-	-	-	-	3.5	6.8	5.0	6.8

	7.5 m				9.0 m				10.5 m				Max.				
	Across UC		Along UC		Across UC		Along UC		Across UC		Along UC		Across UC		Along UC		Max.
m	u	d	u	d	u	d	u	d	u	d	u	d	u	d	u	d	m
12.0	-	-	-	-	-	-	-	-	-	-	-	-	6.4*	6.4*	6.4*	6.4*	4.7
10.5	-	-	-	-	-	-	-	-	-	-	-	-	3.7	5.2*	4.9	5.2*	7.2
9.0	3.5	5.5	4.7	5.5	-	-	-	-	-	-	-	-	2.7	4.7	3.6	4.7	8.7
7.5	3.5	5.5	4.7	5.5	2.6	5.0	3.4	5.0	-	-	-	-	2.2	4.4	3.0	4.5	9.8
6.0	3.4	5.6	4.6	5.6	2.5	5.0	3.4	5.0	-	-	-	-	1.9	3.9	2.6	4.4	10.5
4.5	3.3	5.9	4.4	5.9	2.4	4.9	3.3	5.2	1.9	3.8	2.6	4.5	1.7	3.6	2.4	4.3	10.9
3.0	3.1	6.3	4.2	6.3	2.3	4.8	3.2	5.3	1.8	3.8	2.5	4.5	1.6	3.4	2.3	4.2	11.2
1.5	2.9	6.1	4.0	6.5	2.2	4.7	3.1	5.4	1.8	3.7	2.5	4.4	1.6	3.4	2.3	4.0	11.2
0.0	2.7	5.9	3.9	6.5	2.1	4.6	3.0	5.2	1.7	3.7	2.4	4.2	1.6	3.4	2.3	3.8	11.0
-1.5	2.6	5.8	3.8	6.1	2.1	4.5	3.0	4.9	-	-	-	-	1.7	3.6	2.4	3.6	10.5
-3.0	2.6	5.3	3.7	5.3	-	-	-	-	-	-	-	-	2.5	5.0	3.5	5.0	7.8

Specifications

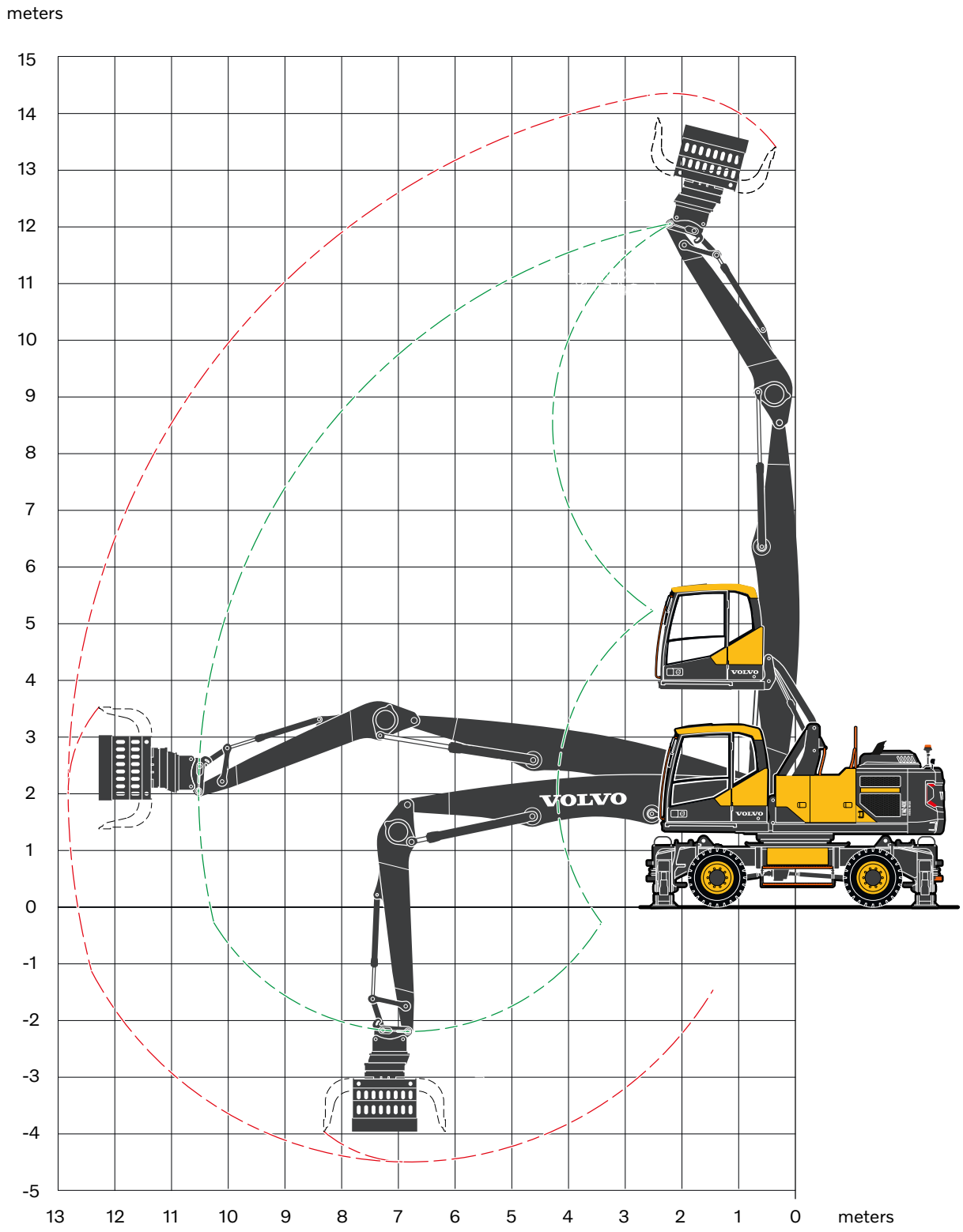

SORTING GRAB		
With sorting grab on sorting arm		
Opening width	mm	2 140
Height, max	mm	1 615
Height, min	mm	1 410
Volume	l	800

Recommended attachments

SORTING GRAB

Lifting capacity at maximum reach with support down according ISO 10567: 3 700 kg

Quick coupler S60, weight: 155 kg

			Maximum material density			
			Direct Fit		S60	
Volume	Weight (grapple only)	Max. load capacity	Weight	Density	Weight	Density
l	kg	kg	kg	t/m³	kg	t/m³
450	1 020	5 000	1 185	5.5	1 235	5.5
500*	1 175*	5 000*	1 340*	4.7*	1 390*	4.3*
800	1 485	6 000	1 650	2.5	1 700	2.3

Note: The sizes and weights marked with an asterisk (*) are recommended.

LIFTING CAPACITY EW240E MATERIAL HANDLER

At the arm end without grapple. For lifting capacity including grapple, simply subtract actual weight of this part from the following values.
Unit: 1 000kg
Notes: 1. Working pressure = 35 MPa. 2. The above values are in compliance with ISO standard 10 567. They do not exceed 87 % of hydraulic lifting capacity or 75 % of tipping load, with the machine on firm, level ground. 3. Load capacities marked with an asterisk (*) are limited by machine's hydraulic lifting capacity rather than tipping load.

	Lifting point	Reach from machine centre (u = support up/d = support down)																				
		4.5 m				6.0 m				7.5 m				9.0 m				Max.				
		Across UC		Along UC		Across UC		Along UC		Across UC		Along UC		Across UC		Along UC		Across UC		Along UC		Max.
	m	u	d	u	d	u	d	u	d	u	d	u	d	u	d	u	d	u	d	u	d	m
Straight boom 6.5 m Sorting arm 4.0 m Front and rear outriggers	12.0	-	-	-	-	-	-	-	-	-	-	-	-	-	-	-	-	11.4	11.4	11.4	11.4	2.5
	10.5	7.3	8.3	8.3	8.3	4.6	7.1	6.2	7.1	-	-	-	-	-	-	-	-	4.6	7.1	6.2	7.1	6.0
	9.0	7.5	7.8	7.8	7.8	4.7	6.7	6.4	6.7	3.2	6.0	4.4	6.0	-	-	-	-	3.0	5.9	4.1	5.9	7.8
	7.5	7.4	7.9	7.9	7.9	4.7	6.7	6.3	6.7	3.3	5.9	4.4	5.9	-	-	-	-	2.4	4.9	3.3	5.3	8.9
	6.0	7.1	8.5	8.5	8.5	4.6	7.0	6.2	7.0	3.2	6.0	4.4	6.0	2.4	4.8	3.3	5.3	2.1	4.2	2.9	4.9	9.7
	4.5	6.7	9.7	9.3	9.7	4.3	7.5	5.9	7.5	3.1	6.2	4.2	6.2	2.3	4.7	3.2	5.3	1.9	3.9	2.6	4.7	10.2
	3.0	6.0	11.0	8.6	11.0	4.0	8.1	5.6	8.1	2.9	6.1	4.1	6.5	2.2	4.7	3.1	5.4	1.8	3.7	2.5	4.4	10.5
	1.5	5.5	8.6	8.0	8.6	3.8	8.3	5.3	8.4	2.8	6.0	3.9	6.6	2.2	4.6	3.0	5.3	1.7	3.7	2.4	4.1	10.5
	0.0	5.3	6.9	6.9	6.9	3.6	8.1	5.2	8.2	2.7	5.8	3.8	6.4	2.1	4.5	3.0	5.0	1.8	3.8	2.5	3.8	10.3
	-1.5	-	-	-	-	3.6	7.3	5.1	7.3	2.7	5.7	3.8	5.7	-	-	-	-	2.1	4.4	3.0	4.4	9.0

Equipment

STANDARD EQUIPMENT
Engine
Turbocharged, 4 stroke Volvo diesel engine with water cooling, direct injection and charged air cooler that meets EU Stage V emission requirements
Intake air pre-heater
ECO mode
Fuel filter and water separator
Fuel filler pump: 50 l/min with automatic shut-off
Aluminium core radiator
Electric / Electronic control system
Contronics-computerized monitoring and diagnostic system
Travel alarm
Adjustable automatic idling system
Adjustable monitor
Safety stop / start function and master electrical disconnect switch
2 frame mounted halogen lamps
Joystick Controlled Support (blade / outrigger function on LH joystick)
Alternator, 140 A
Batteries, 2 x 12 V / 140 Ah
Start motor, 24 V / 5.5 kW
CareTrack via GSM or satellite
Rear view camera
Side view camera left hand side
Superstructure
Reinforced upper frame and modified position of boom and boom cylinders - tailor-made for material handling application
LED rear lights
Service walkway with anti-slip grating
Centralised lubricating point for slew bearing
Undercarriage
Longer, wider, stiffer undercarriage for higher rigidity and durability in handling applications
With 4 reinforced outriggers with enlarged outrigger pads
2.75 m wide axles
3-speed power transmission plus creep speed up to 20 km/h
Oscillating front axle ± 6°
2-circuit travel brakes
Extended axle lock (EAL)
Steps on outrigger (front and rear) for easier access
Hydraulic system
Load sensing hydraulic system
Boom float function
Pressure relief system (servo accumulator)
Proportional controlled visco-clutch cooling fan
Hose rupture valve for boom and arm
Hydraulic long life oil ISO VG46
Boom dampening system
Soft swing function
Arm in limitation function
Cab and interior
Volvo hydraulic elevated Care Cab with fixed roof hatch
Heater & air-conditioner, automatic
Hydraulic dampening cab mounts
Adjustable operator seat and joystick control console
Adjustable steering column
Hydraulic safety lock lever
L8 control joystick, with 5 roller switches
Cab, all-weather sound suppressed, includes:
Cup holder
Door locks
Safety glass, light tinted
Floor mat
Horn
Large storage area
Pull-up type front window
Removable lower windshield
2 inch retractable seat belt
Windshield wiper with washer and intermittent feature
Sun shield,front, roof & rear
Master ignition key
Lower wiper
Digging equipment
Centralised lubrication point

OPTIONAL EQUIPMENT
Engine
Diesel coolant heater with digital timer
Block heater, 240 V
Water separator with heater
Dust net
Reversible fan
Air inlet turbo pre-cleaning system
Micro- mesh and sealing for engine compartment
Tropical cooling
Automatic engine shutdown
Waste package
Electric / Electronic control system
Remote controlled welcome light
Joystick steering (Comfort Drive Control)
24 channel electric centre passage
Luxury LED work lights package (11) - includes:
a) remote controlled welcome lights
b) boom-mounted (2)
c) rear cab (1) and counterweight mounted (1)
d) cab front (4)
e) arm mounted (2)
f) LED light for side camera
Cruise control
Anti-theft system
Tilting and rotating attachment preparation
Rotating beacon on cab and counterweight
Undercarriage
Twin tires 10.00 – 20 / 11.00 – 20
Stone protection rings
4 outrigers + cleaning blade at front
Standard toolbox or Drawer type toolbox at either side
Travel speed : 20 km/h
Hydraulic system
Hydraulic oil, biodegradable ISO VG32
Hydraulic oil, biodegradable ISO VG46
Hydraulic long life oil ISO VG32
Hydraulic long life oil ISO VG68
Hydraulic equipment for attachments : peel grapple and sorting grab
Height limitation function
Flow and pressure control
Cab and interior
Falling object guard (FOG)
Cab mounted falling object protective structures (FOPS)
Rain shield, front
Sunlight protection, roof hatch (steel)
Safety net for front window
One-piece polycarbonate window
Anti-vandalism kit
Radio with CD player and MP3 input
Ashtray
Lighter
Fabric seat, with heater
Fabric seat, with heater and air suspension
Luxury operator seat
Digging equipment
Boom 6.5 m in straight boom
Gooseneck arm 5.0 m
Sorting arm 4.0 m
Arm hoses protection
Service
Wheel chocks
Tool kit, daily maintenance
Attachments
Sorting grab
Poly grapple

SELECTION OF VOLVO OPTIONAL EQUIPMENT

Volvo Smart View

Boom height limitation

Guarding packages

Waste packages

Tires

LED lights

Not all products are available in all markets. Under our policy of continuous improvement, we reserve the right to change specifications and design without prior notice.
The illustrations do not necessarily show the standard version of the machine.