Volvo Construction Equipment

# EW160E

Volvo Excavators 16.2-18.2 t 115 kW

# A passion for performance

At Volvo Construction Equipment, we're not just coming along for the ride. Developing products and services that raise productivity – we are confident we can lower costs and increase profits for industry experts. Part of the Volvo Group, we are passionate about innovative solutions to help you work smarter – not harder.

**Helping you to do more**

Doing more with less is a trademark of Volvo Construction Equipment. High productivity has long been married to low energy consumption, ease of use and durability. When it comes to lowering life-cycle costs, Volvo is in a class of its own.

**Designed to fit your needs**

There is a lot riding on creating solutions that are suited to the particular needs of different industry applications. Innovation often involves high technology – but it doesn't always have to. Some of our best ideas have been simple, based on a clear and deep understanding of our customers' working lives.

**You learn a lot in 180 years**

Over the years, Volvo has advanced solutions that have revolutionized the use of construction equipment. No other name speaks Safety louder than Volvo. Protecting operators, those around them and minimizing our environmental impact are traditional values that continue to shape our product design philosophy.

**We're on your side**

We back the Volvo brand with the best people. Volvo is truly a global enterprise, one that is on standby to support customers quickly and efficiently – wherever they are.

**We have a passion for performance.**

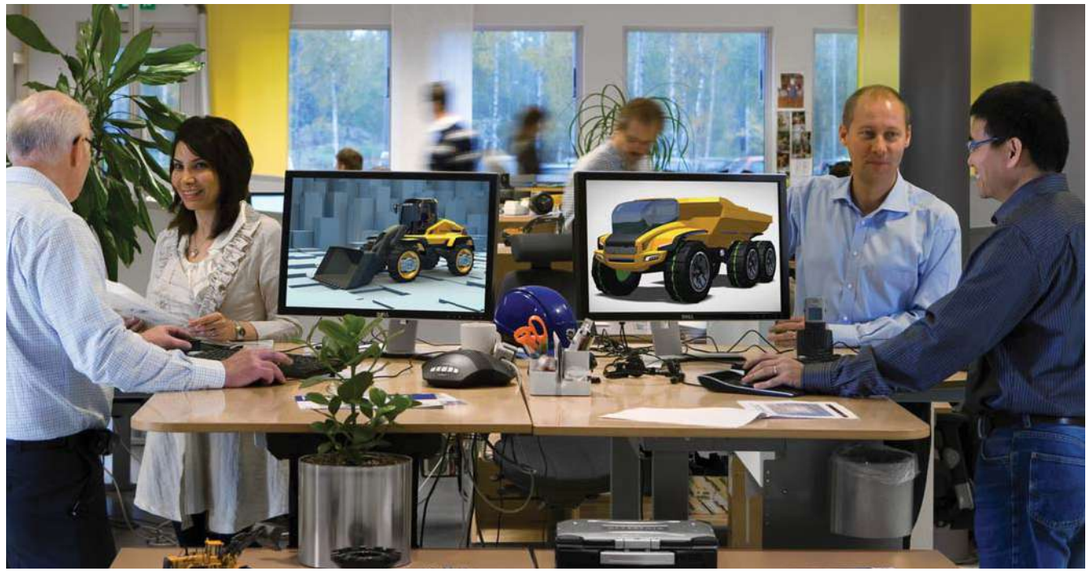

Volvo Trucks

Renault Trucks

Mack Trucks

UD Trucks

Volvo Buses

Volvo Construction Equipment

Volvo Penta

Volvo Financial Services

# A vision of versatility

Made in Germany, the Volvo EW160E wheeled excavator is an efficient and versatile machine that can make your life easier on the job site as well as increase productivity. Take all your tools with you in one trip and avoid any unnecessary travelling.

**Work modes**

The E-Series Wheeled Excavators feature four work modes combined with three travel speeds. In total 12 different combinations to be chosen to provide optimum performance and improved fuel efficiency.

**Breaker/shear (X1) and tilt/rotate (X3) management**

Increase your wheeled excavator versatility with optional hydraulics functions X1 breaker/shear and X3 tilt/rotate. X1 function utilizes the main system hydraulic flow to operate attachments requiring one or two way flow whereas X3 function provides an appropriate two way flow for tilting or rotating attachments.

**Drawer type tool box**

This newly developed and unique concept has been tested to carry up to 120kg. Due to the smooth sliding action, it's much easier for the operator to pull out chains using the machine or other equipment manually without having to bend over or strain their body. Because it acts as a slide-out drawer, items are more visible so you can check and adjust your toolbox content much easier. A mechanical stopper has been added to prevent it from sliding out of the machine and the box dividers can be adjusted into five different positions.

# TRAILER HITCH

For maximum versatility and productivity, take all your tools to the jobsite in one trip. The trailer hitch is attached to your wheeled excavator approved for road homologation so that you can transport tools and attachments to and from your jobsite with ease.

# CAB

Volvo's industry-leading cab provides excellent visibility that is crucial for operator comfort, control and safety on your jobsite. The spacious cab, with ample storage, leg room, easy to access controls and an optional luxury seat increases operator productivity and reduces fatigue. The cab's view to the right has also been made clearer.



# Operate in style

To ensure comfort and productivity, operating the EW160E has been designed with easy operation in mind. The cab, HMI and luxuries like climate control all contribute to a happier and more comfortable operator for increased uptime.

### HMI

All machine interfaces – including the joysticks, keypad and LCD monitor – are ergonomically positioned and designed for optimum control and efficiency. For operator convenience and ease of use, the number of switches has been significantly reduced.

### In cab fluid check

As soon as you start up your machine it checks all fluid levels on board, including engine oil and hydraulic fluid. The machine's electronic display will tell the operator if any fluids need attention, keeping the machine running at its best and free from any unscheduled downtime.

### ROPS

The Volvo cab features Roll Over Protective Structure (ROPS) safety certification, which provides more operator safety and peace-of-mind when operating in tough environments. It also provides greater ergonomic comfort leading to reduced fatigue and increased productivity.

### Fuel filler pump

The fuel filler electric pump can deliver 50 liters of fuel per minute for easy and clean filling of the fuel tank from ground level. It is conveniently located next to the fuel tank.

# Control with confidence

It's not just being comfortable in the machine that is important – confidence while operating is also a key element in ensuring productivity. The EW160E wheeled excavator is equipped with the latest features to make an operator feel safe and in control of the machine at all times.

**New hydraulic system**

The improved hydraulic system allows maximum utilization of available engine power regardless of the application, increasing controllability and responsiveness of operations. This results in higher operator efficiency and safer controlled movement.

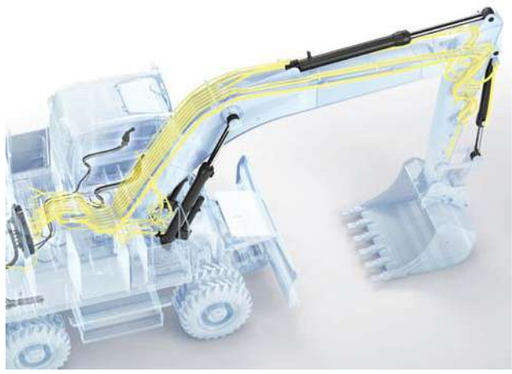

**Tractive force**

Built to last, Volvo's durable wheeled excavator undercarriage is built for tough work. Travelling on inclines or difficult terrain is easy thanks to increased tractive force.

**Volvo Smart View**

Three optional cameras attached to three different corners of the machine – front, side and back – combine to create a bird's eye view of the machine operating from above. The cameras also provide individual views of the machine so you can see all angles and ensure safe rotation. This intelligent and industry leading technology offers a 360o view of real footage happening in real time. The view can be seen through main LCD display. And if you have Volvo Co-Pilot (together with Dig Assist), you can have this view as well.

# BOOM SUSPENSION SYSTEM

The Boom Suspension System improves operator comfort and allows for faster travel over bumpy roads or rough terrain. It provides a dampening effect thanks to a hydraulic circuit complete with gas pressure dampers. The system ensures the operator has more control while travelling at high speeds.

# FLEXIBLE CONFIGURATIONS

Depending on your market and application, make the EW160E wheeled excavator perfect for your jobsite wtith flexible configurations. Tailor your machine to your precise specifications and get it delivered straight from the factory.

# Flex your features

The EW160E wheeled excavator can be tailored to your precise specifications to suit any jobsite. With a whole range of flexible configurations you can change attachments easily and add on useful features.

**Undercarriage – with or without trailer hook**

Volvo's built to last undercarriage is available with a trailer hook for added convenience. Volvo offers the machine with a hitch so you can pull trailers up to eight tonnes with dry run brakes and 3 tonnes without brakes.

**Tyres**

Choose from a wide range of high quality tyres to best suit your jobsite, including single and twin tyres. Depending on ground conditions, Volvo offers 12 different configurations of tyres from eight different suppliers.

**Arm/grapple system**

Expand your working scope with a wide range of boom and arm options. The different arm lengths can be chosen according to jobsite requirements and market legislation. The grapple manoeuvre connection allows the exchange of tools. Instead of going to the cylinder, the oil is redirected directly to the attachment which enables the operator to steer the attachment with the right hand joystick.

# Fuelling reliable and efficient operations

For maximum efficiency and reliability, the EW160E features Volvo's most powerful Stage IV engine. The machine has also been designed and rigorously tested to reduce fuel consumption and increase your productivity.

**ECO mode**

For increased fuel efficiency ECO mode turns on automatically, which reduces your fuel consumption while maintaining productivity.

**Design and testing**

The Volvo EW160E wheeled excavator has been designed and tested to ensure the highest standard of reliability and efficiency. Components, systems and technology work together to increase machine life and productivity.

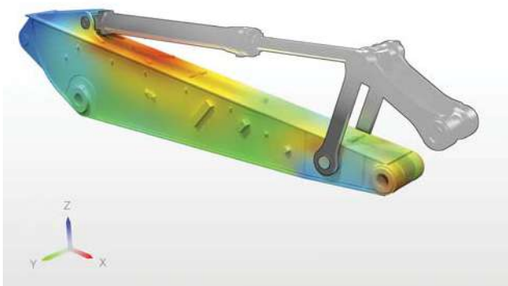

**Robust axles**

The robust excavator axles with automatic or operator controlled front axle oscillation are highly durable and made to last for increased wear and component life.

**Ground clearance**

The undercarriage protects itself with high ground clearance and is strong enough to endure hard ground and tough surface conditions.

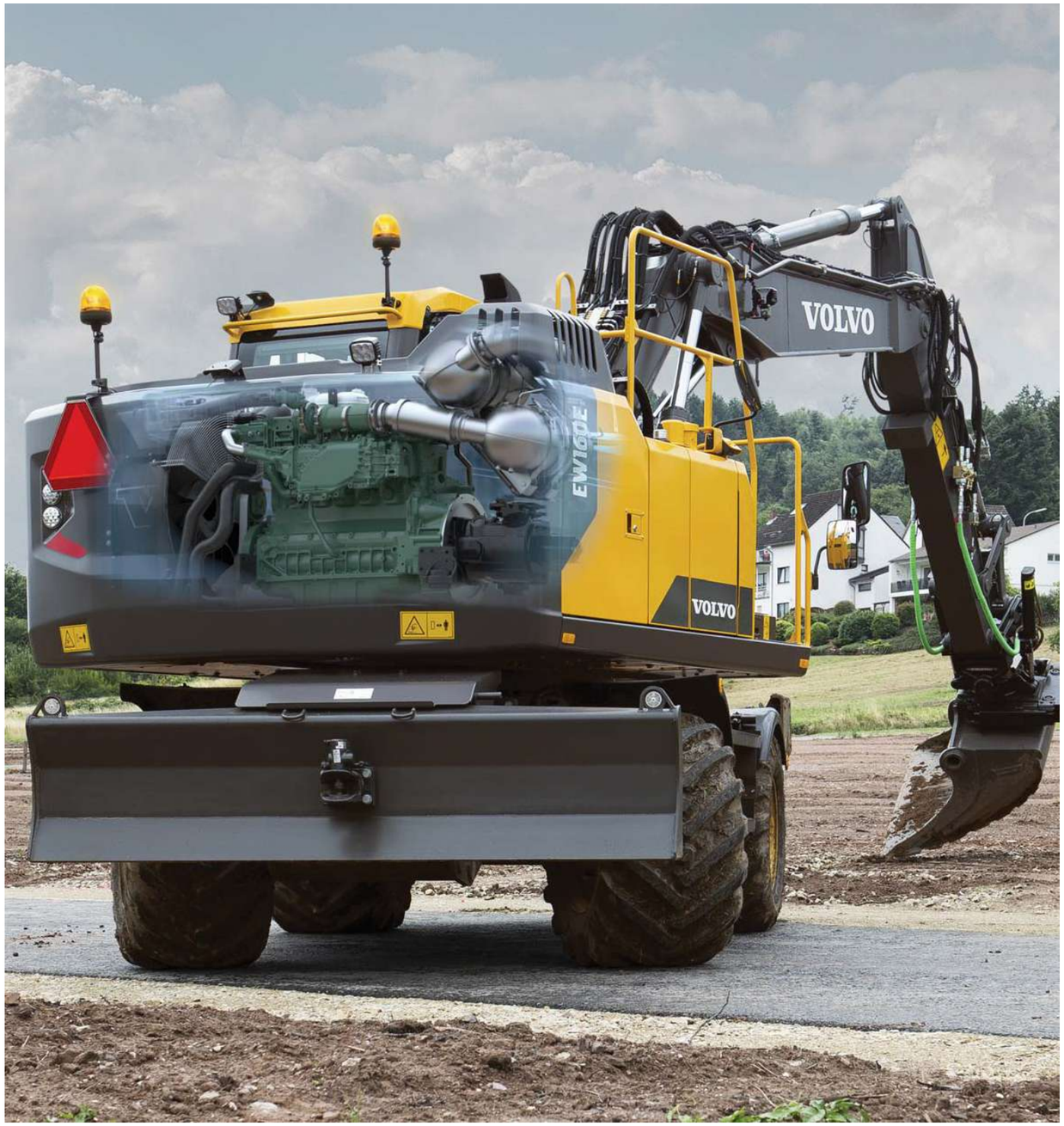


# ENGINE

Volvo's wheeled excavators with Stage IV engines are powerful and efficient, designed to reduce fuel consumption and increase your productivity. With advanced technology, save your business time and cost.

# HYDRAULICALLY ELEVATED CAB

The hydraulically elevated Volvo Care Cab lifts the operator up to five meters above the ground at eye level, providing a wider field of vision to the entire job site for more productivity and safety.

# No downtime to waste

Specifically for waste handling applications, the EW160E can be equipped with excellent features to ensure maximum productivity and durability on site. This tough environment can be counteracted with a EW160E excavator.

**Waste handling package**

A combination of three features, including the cyclonic engine precleaner, screened ventilation covers with additional sealing around side doors and reversible cooling fans all make waste handling more comfortable for the operator.

**Special grab arms**

Special grab arms for attachments (such as sorting grapples) don't require the use of a bucket cylinder. To operate these attachments, the bucket control function is used to open and close the grapple.

**Solid rubber tyres**

The solid rubber tyres are designed to meet the most demanding requirements and are manufactured using the latest construction techniques, to offer the industry's most durable, versatile and longlasting resilient tire.

**Wide axles – 2.75 m**

For better side stability the EW160E is optionally equipped with 2.75 m axles. The blade will automatically be 2.75 m wide, but the outriggers, however, are the same with wide or standard axles.

# Configure your perfect excavator

## TRAILER HITCH

For maximum versatility and productivity, take all your tools to the jobsite in one trip.

**Mono boom, two piece boom and/ or two-piece off set boom**

A wide range of boom options and arm lengths can be chosen according to jobsite requirements and market legislation.

**New hydraulic system**

The improved hydraulics system allows maximum utilization of available engine power regardless of the application, increasing controllability and responsiveness of operation.

**Auto greasing**

This optional feature supplies the correct amount of lubrication to all greasing points on a timed basis for reduced costs.

## FLEXIBLE CONFIGURATIONS

Depending on your market and application, make the EW160E wheeled excavator perfect for your jobsite with a range of flexible configurations.

**Made in Germany**

Designed, made and tested in Germany, the EW160E wheeled excavator is perfect for use anywhere in the world.

## BOOM SUSPENSION SYSTEM

The Boom Suspension System improves operator comfort and allows for faster travel over bumpy roads or rough terrain.

**Volvo Smart View**

Three cameras attached to different corners of the machine – the front, side and back – create a bird's eye view of the machine operating from above.

**Rear and side view camera**

The rear and side view camera are fitted to the machine so that the operator can see different angles around the machine on a display monitor.

**AdBlue®**

Volvo offers a total AdBlue solution that is quality assured, cost efficient and easily accessible. Contact your Volvo dealer for more information.
® = registered trademark of the Verband der Automobilindustrie e.V. (VDA)

## CAB

Volvo's industry-leading cab provides excellent visibility that is crucial for operator comfort, control and safety on your jobsite.

## HYDRAULICALLY ELEVATED CAB

The hydraulically elevated Volvo Care Cab lifts the operator by five meters above the ground at eye level for increased visibility.

## ENGINE

Volvo's wheeled excavators with Stage IV engines are powerful and fuel efficient.

**ECO mode**

For increased fuel efficiency ECO mode turns on automatically, which reduces your fuel consumption while maintaining productivity.

**Heavy counterweight**

A heavier counterweight for increased stability is available when using bulky attachments.

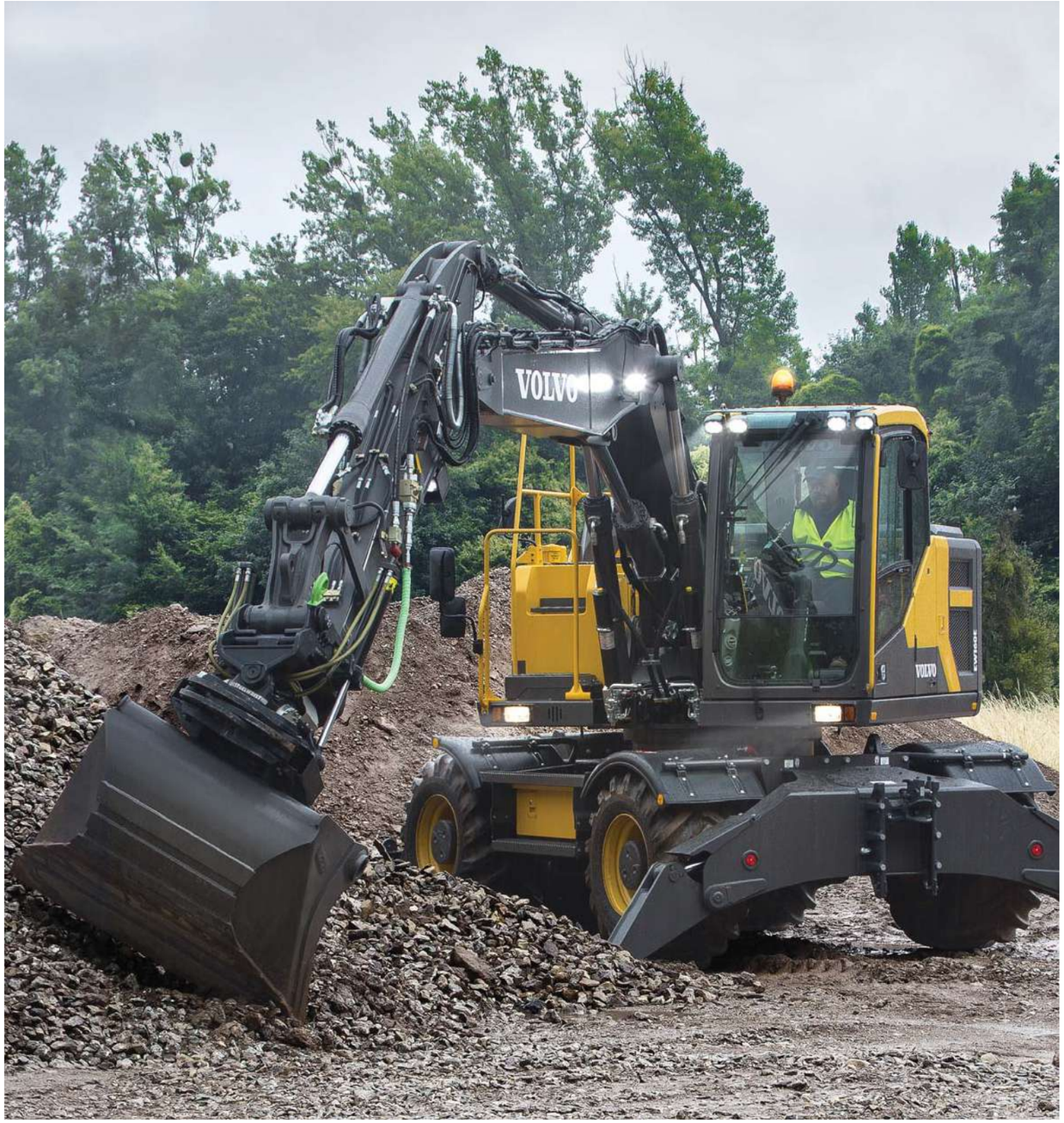


# MATCHED ATTACHMENTS

Volvo's durable attachments have been purpose-built to work in perfect harmony with Volvo machines, forming one solid, reliable unit. With functions and properties ideally matched, Volvo attachments are an integrated part of the excavator for which they're intended.



# Mix and match for a superior fit

Maximize your productivity and profitability with Volvo's EW160E wheeled excavator and a range of durable attachments. Increase your versatility, access more applications and perform a variety of tasks – all while experiencing faster cycle times and excellent control.

**Buckets – GP/HD/XD**

Volvo's buckets are the perfect tool for digging and re-handling inl all conditions from soft, medium and hard materials. Heavy-duty buckets are intended for productive digging in compact materials. All provide maximum productivity and long life and feature original Volvo wear components.

**Quick couplers**

Volvo offers a full range of quick couplers, from its dedicated Volvo S-type coupler to the Volvo symmetrical and Steelwrist® Quick Couplers. The Steelwrist® Quick couplers come with Front Pin Lock Technology and all of our quick couplers are built to perfectly match Volvo Machines and Volvo Attachments. Steelwrist® is a registered trademark of Steelwrist AB

**HB18 Hydraulic Breaker**

The HB18 hydraulic breaker is optimized to the specific weights of Volvo machines and tailored to Volvo quick couplers for swift, safe and simple attachment changes. The HB18 is available with a full assortment of tools.

**Tilt Rotator**

Volvo's tilt rotator can be ordered factory installed with multifunctional joysticks and color display that's fully integrated into the machine's system. The new series of Volvo XD excavator buckets are perfectly matched to the factory installed tilt rotator.

# Adding value to your business

Being a Volvo customer means having a complete set of services at your fingertips. Volvo can offer you a long-term partnership, protect your revenue and provide a full range of customer solutions using high quality parts, delivered by passionate people. Volvo is committed to increasing the positive return on your investment and maximising uptime.

**Complete Solutions**

Volvo has the right solution for you. So why not let us provide all your needs throughout the whole life cycle of your machine? By listening to your requirements, we can reduce your total cost of ownership and increase your revenue.

**Genuine Volvo Parts**

Our attention to detail is what makes us stand out. This proven concept acts as a solid investment in your machine's future. Parts are extensively tested and approved because every part is vital for uptime and performance. Only by using Genuine Volvo Parts, can you be sure that your machine retains the renowned Volvo quality.

**Service Network**

In order to respond to your needs faster, a Volvo expert is on their way to your job site from one of our Volvo facilities. With our extensive infrastructure of technicians, workshops and dealers, Volvo has a comprehensive network to fully support you using local knowledge and global experience.

# CUSTOMER SUPPORT AGREEMENTS

The range of Customer Support Agreements offer preventive maintenance, total repairs and a number of uptime services. Volvo uses the latest technology to monitor machine operation and status, giving you advice to increase your profitability. By having a Customer Support Agreement you are in control of your service costs.

# Volvo EW160E in detail

### Engine

Volvo Construction Equipment is ready to comply with the tough new EU Stage IV legislation for off-road vehicles with the introduction of a cascade of innovations in its new generation engines with Volvo Advanced combustion technology (V-ACT).
Volvo machines are equipped with in-line turbo charged diesel engine with high pressure unit injector system. The engine features a externally cooled exhaust gas re-circulation (E-EGR) , a Diesel Particulate Filter ( DPF ) and a Selective Catalytic Reduction( SCR) with AdBlue.

| | | |
|---|---|---|
| Engine | Volvo | D6J |
| Max. power at | r/min | 1 900 |
| Net (ISO9249/SAEJ1349) | kW | 112 |
| | hp | 152 |
| Gross (ISO 14396/SAE J1995) | kW | 115 |
| | hp | 156 |
| Max. torque | Nm | 716 |
| at engine speed | r/min | 1 400 |
| No. of cylinders | | 6 |
| Displacement | l | 5.7 |
| Bore | mm | 98 |
| Stroke | mm | 126 |

### Electrical system

High-capacity electrical system that is well protected. Waterproof double-lock harness plugs are used to secure corrosion-free connections. The main relays and solenoid valves are shielded to prevent damage. The master switch is standard.

| | | |
|---|---|---|
| Voltage | V | 24 |
| Batteries | V | 2 x 12 |
| Battery capacity | Ah | 2 x 140 |
| Alternator | V/Ah | 28/120 |
| Alternator rating | W | 3 360 |

### Undercarriage

Drive train: A variable axle piston motor in combination with a power shift gearbox supplies 3 speeds. The gearbox distributes than the energy via propeller shafts to the axles.
Framework: All-welded robust torsion box frame.
Wheels: Alternative single and twin wheels available.
Front axle: Robust excavator axle with automatic or operator controlled front axle oscillation lock.
Undercarriage available with all possible combinations of bolted outriggers and /or parallel blade.

| | | |
|---|---|---|
| Oscillating | ± ° | 9 |
| with mudguards | ± ° | 6 |
| Twin wheels | type | 10-20 |
| Tractive force (net) | kN | 111 |
| Travel speed, on road | km/h | 20.0 / 30.0 / 35.0 |
| Travel speed, off road | km/h | 5.0 / 7.4 / 8.7 |
| Travel speed, creep | km/h | 4 |
| Min. turning radius | m | 7.3 |

### Cab

New design Volvo Care Cab with operator protective structure, large and roomy interior. One way travel pedal with rocker switch control (F-N-R) on the right joystick. One-touch release for digging brake pedal.
Audio system with remote control and Bluetooth system for hands free phoning. Independently adjustable joystick consoles.
Excellent all-round visibility provided by maximized cab class, transparent roof hatch, 2-piece sliding door window and long stroke, easy to adjust and narrow steering column. The liftable front windshield can easily be stored in the inside roof space and clipped in position. The removable lower front glass can be stored in the side door pocket. Interior lighting consists of one reading light and one light with timer.
The pressurized and filtered cab air is supplied by a 14-vent climate-control providing fast defrosting and high cooling and heating performance. Viscous/ spring mounted suspension cushions protect the operator from vibrations.
Deluxe air-suspension seat with adjustable seat suspension, height, tilt, recline and forward-backward settings.(option)
Adjustable, easy to read 8.3" LCD color monitor provides real time information of machine functions and important diagnostic information and is switchable to rear view camera monitor( standard ) / side view camera ( option ). A new multi function button on left hand joystick with programmable function to improve the operator comfort.

### Hydraulic system

Closed-centre load sensing hydraulic system with pressure compensated valves. Load independence of movements. Flow sharing feature, combined with a high flow pump (power regulation). The system gives superior manoeuvrability and fast movements, for optimal working result and economy.
The following working modes are included in the system:
Parking mode (P): Parking position for optimal safety.
Travel mode (T): Engine speed is controlled by travel pedal stroke for low fuel consumption and noise.
Working mode (W): Full working flow with adjustable engine rpm for normal working and best speed utilisation.
Customer mode (C): Operator can set proper oil flow in accordance with job conditions.
Power Boost: All digging and lifting forces are increased.

| | | |
|---|---|---|
| **Main pump (Low noise axial piston pump)** | | |
| Max. flow | l/min | 275 |
| **Brake + steering pump (Low noise gear pump)** | | |
| Max. flow | l/min | 36 |
| **Servo pump (Low noise gear pump)** | | |
| Max. flow | l/min | 15 |
| **Relief valve setting pressure** | | |
| Implement | MPa | 34 / 37.5 |
| Travel system | MPa | 38 |
| Pilot system | MPa | 3.5 |

### Brake System

Service brakes: servo-hydraulically manoeuvred self-adjusting wet multidiscs with two separate brake circuits.
Parking brake: negative wet disc in gear housing, spring applied and pressure released.
Digging brake: service brake with mechanical lock system.
Security system: The 2-circuit travel brakes are supplied with two accumulators in the event of failure in the service brake system.

### Swing system

The superstructure is slewed by the means of a radial piston motor without reduction gear.
Automatic slew holding brake and anti-rebound valve are standard.

| | | |
|---|---|---|
| Max. slew speed | r/min | 9 |
| Max. slew torque | kNm | 50.4 |

### Total Machine Weights

| | | |
|---|---|---|
| Machine with 5.0 m monoblock boom, 2.45 m dipper arm, quickfit S6, 530 kg / 780 l bucket. Standard counterweight. | | |
| With dozer blade front and outriggers rear | kg | 17 250 |
| With dozer blade rear only | kg | 16 200 |
| With front and rear outriggers | kg | 17 500 |
| Machine with 5.1m 2-piece boom, 2.45 m dipper arm, quickfit S6, 530 kg / 780 l bucket. Standard counterweight. | | |
| With dozer blade front and outriggers rear | kg | 17 600 |
| With dozer blade rear only | kg | 16 550 |
| With front and rear outriggers | kg | 17 850 |

### Service Refill

| | | |
|---|---|---|
| Fuel tank | l | 250 |
| DEF/AdBlue® tank | l | 25 |
| Hydraulic system, total | l | 250 |
| Hydraulic tank | l | 123 |
| Engine oil | l | 25 |
| Engine coolant | l | 33 |
| Transmission | l | 2.5 |
| Axle differential: | | |
| Front axle | l | 9.5 |
| Rear axle | l | 12.5 |
| Final drive | l | 4 x 2.5 |

### Sound Level

| | | |
|---|---|---|
| Sound level in cab according to ISO 6396 | | |
| LpA | dB(A) | 70 |
| External sound level according to ISO 6395 and EU Noise Directive 2000/14/EC | | |
| LwA | dB(A) | 100 |



# Specifications

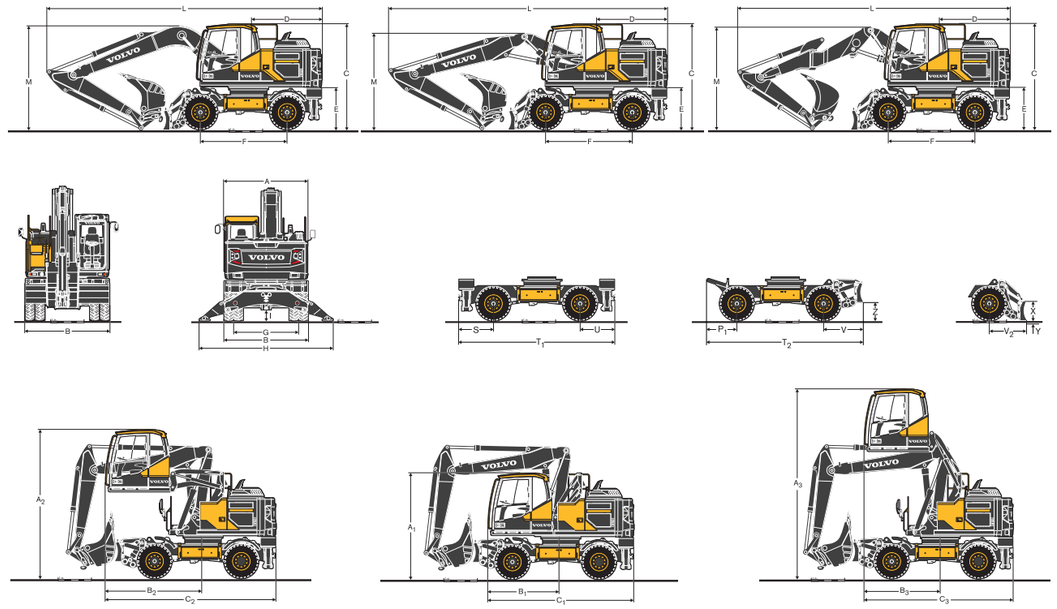

### DIMENSIONS

| | Description | Unit | Mono boom | 2-piece boom | 2-piece offset boom |
|---|---|---|---|---|---|
| | | m | 5.0 | 5.1 | 5.2 |
| A | Overall width of superstructure | mm | 2 520 | 2 520 | 2 520 |
| B | Overall width | mm | 2 540 / 2 750 | 2 540 / 2 750 | 2 540 / 2 750 |
| C | Overall height of cab | mm | 3 140 | 3 140 | 3 140 |
| D | Tail slew radius | mm | 2 150 | 2 150 | 2 150 |
| E | Counterweight clearance | mm | 1 260 | 1 260 | 1 260 |
| F | Wheel base | mm | 2 600 | 2 600 | 2 600 |
| G | Tread | mm | 1 940 | 1 940 | 1 940 |
| H | Outrigger width (front or rear) | mm | 3 980 | 3 980 | 3 980 |
| I | Min. ground clearance | mm | 360 | 360 | 360 |

### DIMENSIONS

| | Description | Unit | Mono boom | | | | |
|---|---|---|---|---|---|---|---|
| | | m | 5.0 | | | | |
| | | | Arm | | | | Grab Arm |
| | | m | 2.0 | 2.45 | 2.6 | 3.1 | 2.95* |
| L | Overall length | mm | 8 240 | 8 250 | 8 240 | 7 940 | 8 255* |
| M | Overall height of boom | mm | 3 070 | 3 040 | 3 200 | 3 700 | 3 155* |
| L1 | Overall length | mm | - | - | - | - | - |
| M1 | Overall height of boom | mm | - | - | - | - | - |
| N | Front overhang | mm | - | - | - | - | - |

### DIMENSIONS

| | Description | Unit | 2-piece boom | | | | | 2-piece offset boom | |
|---|---|---|---|---|---|---|---|---|---|
| | | m | 5.1 | | | | | 5.2 | |
| | | | Arm | | | | Grab Arm | Arm | |
| | | m | 2.0 | 2.45 | 2.6 | 3.1 | 2.95* | 2.0 | 2.45 |
| L | Overall length | mm | 8 330 | 8 360 | 8 360 | 8 150 | 8 350* | 8 460 | 8 450 |
| M | Overall height of boom | mm | 2 865 | 2 860 | 2 900 | 3 390 | 2 950* | 2 750 | 2 800 |
| L1 | Overall length | mm | 6 440 | 6 440 | 5 960** | 5 950** | 6 900* | 6 220 | 6 260 |
| M1 | Overall height of boom | mm | 3 920 | 3 920 | 3 920** | 3 940** | 3 990* | 3 980 | 3 980 |
| N | Front overhang | mm | 3 200 | 3 215 | 2 715** | 2 710** | 3 660* | 2 980 | 3 020 |

*grab arm, without clamshell bucket | ** without bucket

### DIMENSIONS

| Description | Unit | Undercarriage dimensions |
|---|---|---|
| P | mm | 1 180 |
| P1 | mm | 750 |
| Q | mm | 1 150 |
| R/U | mm | 1 030 |
| S | mm | 1 080 |
| T | mm | 4 800 |
| T1 | mm | 4 700 |
| T2 | mm | 4 470 |
| V | mm | 1 120 |
| V2 | mm | 920 |
| X | mm | 630 |
| Y | mm | 153 |
| Z | mm | 520 |

### DIMENSIONS

| Description | Unit | Hydraulic Elevated Cab |
|---|---|---|
| A1 | mm | 3 150 |
| B1 | mm | 2 160 |
| C1 | mm | 4 360 |
| A2 | mm | 4 410 |
| B2 | mm | 2 900 |
| C2 | mm | 5 100 |
| A3 | mm | 5 650 |
| B3 | mm | 2 250 |
| C3 | mm | 4 440 |

# Specifications

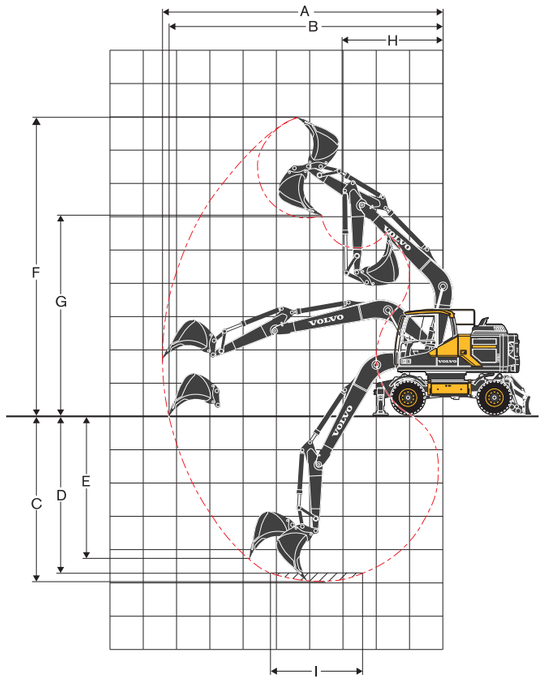


**Mono boom 5.0 m and dipper arm 2.0 m, 2.45 m, 2.6 m, 3.1 m**

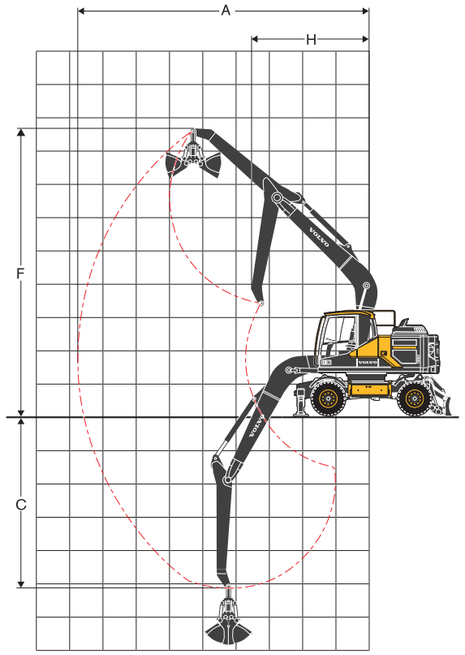


**Monoboom 5.0 m and grab arm 2.95 m**

**WORKING RANGES WITH DIRECT FIT BUCKET**

| | | | 5.0 boom | | | | |
|---|---|---|---|---|---|---|---|
| | | Unit | Arm | | | | Grab arm |
| | | m | 2.0 | 2.45 | 2.6 | 3.1 | 2.95* |
| A | Max. digging reach | mm | 8 600 | 9 000 | 9 150 | 9 620 | 8 050 |
| B | Max. digging reach on ground | mm | 8 400 | 8 810 | 8 960 | 9 450 | - |
| C | Max. digging depth | mm | 5 130 | 5 580 | 5 730 | 6 230 | 4 590 |
| D | Max. digging depth (l = 2 440 mm level) | mm | 4 910 | 5 400 | 5 550 | 6 070 | - |
| E | Max. vertical wall digging depth | mm | 4 320 | 4 770 | 4 920 | 5 400 | |
| F | Max. cutting height | mm | 8 840 | 9 100 | 9 190 | 9 470 | 8 090 |
| G | Max. dumping height | mm | 5 900 | 6 150 | 6 230 | 6 520 | - |
| H | Min. front slew radius | mm | 3 140 | 3 150 | 3 160 | 3 190 | 3 270 |

* without clamshell bucket

**DIGGING FORCES WITH DIRECT FIT BUCKET**

| | | | | | | | |
|---|---|---|---|---|---|---|---|
| Breakout force (bucket) | (ISO) | kN | 126* | 126* | 126* | 126* | - |
| Tearout force | (ISO) | kN | 98* | 86* | 82* | 72* | - |

* with powerboost

| | | | | | | |
|---|---|---|---|---|---|---|
| **Max. recommended sizes for direct fit buckets** | | | | | | |
| GP-Bucket (1.8 t/m³) | l | 1 100 | 957 | 957 | 858 | - |
| HD-Bucket (2.1 t/m³) | l | 770 | 770 | 770 | 682 | - |
| **Max. recommended sizes for quick fit buckets** | | | | | | |
| S6/S60 QF GP-Bucket (1.8 t/m³) | l | 870 | 780 | 780 | 700 | - |
| S6 QF HD-Bucket (2.1 t/m³) | l | 700 | 700 | 620 | 500 | - |
| S1 QF GP-Bucket (1.8 t/m³) | l | 870 | 780 | 700 | 620 | - |
| S1 QF HD-Bucket (2.1 t/m³) | l | 700 | 620 | 620 | 360 | - |

Note: 1. Bucket size based on SAE-J296, heaped material with a 1:1 angle of repose. | 2. “Max permitted sizes” are for reference only and are not necessarily available from the factory. | 3. “Max permitted sizes” are for heavy counterweight.



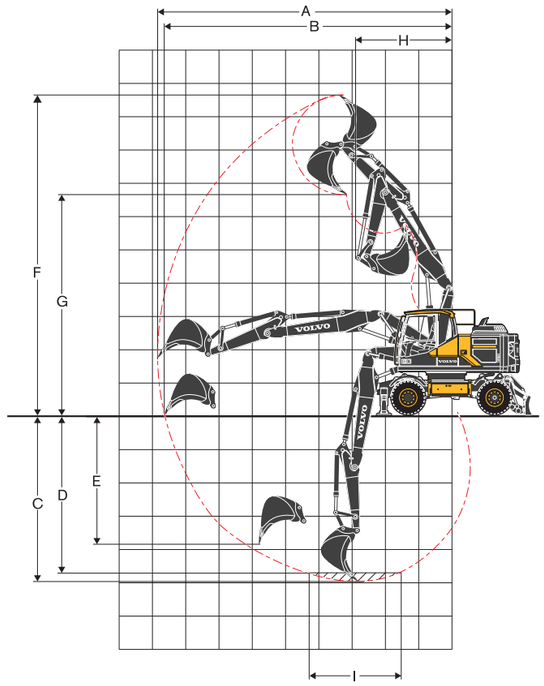


**2-piece boom 5.1m and dipper arm 2.0m, 2.45m, 2.6m, 3.1m**

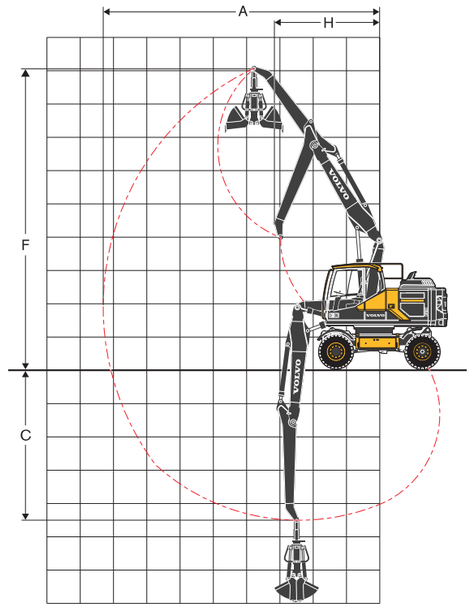


**2-piece boom 5.1m and grab arm 2.95m**

**WORKING RANGES WITH DIRECT FIT BUCKET**

| | | | 5.1 m 2-piece boom | | | | |
|---|---|---|---|---|---|---|---|
| | | Unit | Arm | | | | Grab arm |
| | | m | 2.0 | 2.45 | 2.6 | 3.1 | 2.95* |
| A | Max. digging reach | mm | 8 720 | 9 150 | 9 300 | 9 770 | 8 200 |
| B | Max. digging reach on ground | mm | 8 520 | 8 960 | 9 110 | 9 600 | - |
| C | Max. digging depth | mm | 5 120 | 5 570 | 5 720 | 6 220 | 4 600 |
| D | Max. digging depth (l = 2 440 mm level) | mm | 5 020 | 5 470 | 5 620 | 6 120 | - |
| E | Max. vertical wall digging depth | mm | 4 080 | 4 550 | 4 700 | 5 180 | - |
| F | Max. cutting height | mm | 9 640 | 10 000 | 10 100 | 10 450 | 9 000 |
| G | Max. dumping height | mm | 6 670 | 7 000 | 7 110 | 7 480 | - |
| H | Min. front slew radius | mm | 2 690 | 2 820 | 2 860 | 3 000 | 3 010 |

* without clamshell bucket

**DIGGING FORCES WITH DIRECT FIT BUCKET**

| | | | | | | | |
|---|---|---|---|---|---|---|---|
| Breakout force (bucket) | (ISO) | kN | 126* | 126* | 126* | 126* | - |
| Tearout force | (ISO) | kN | 98* | 86* | 82* | 72* | - |

* with powerboost

| | | | | | | |
|---|---|---|---|---|---|---|
| **Max. recommended sizes for direct fit buckets** | | | | | | |
| GP-Bucket (1.8 t/m³) | l | 957 | 957 | 858 | 770 | - |
| HD-Bucket (2.1 t/m³) | l | 770 | 770 | 770 | 682 | - |
| **Max. recommended sizes for quick fit buckets** | | | | | | |
| S6/S60 QF GP-Bucket (1.8 t/m³) | l | 870 | 780 | 780 | 700 | - |
| S6 QF HD-Bucket (2.1 t/m³) | l | 700 | 620 | 620 | 500 | - |
| S1 QF GP-Bucket (1.8 t/m³) | l | 870 | 700 | 700 | 620 | - |
| S1 QF HD-Bucket (2.1 t/m³) | l | 700 | 620 | 620 | 360 | - |

Note: 1. Bucket size based on SAE-J296, heaped material with a 1:1 angle of repose. | 2. “Max permitted sizes” are for reference only and are not necessarily available from the factory. | 3. “Max permitted sizes” are for heavy counterweight.

# Specifications

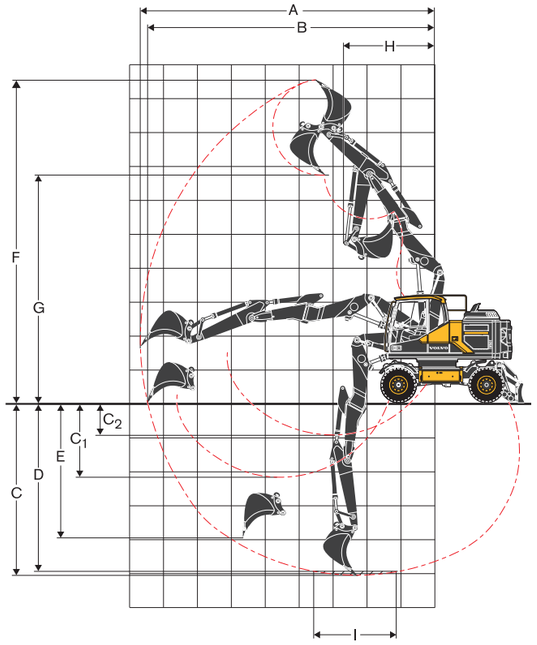


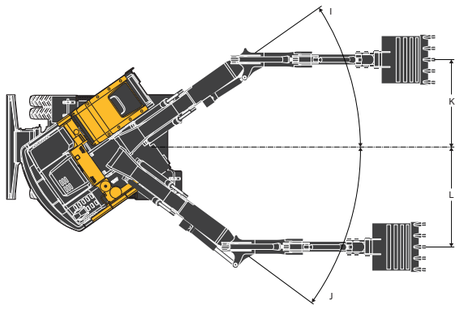


**2-piece offset boom 5.2m and dipper arm 2.0m, 2.45m**

**WORKING RANGES WITH DIRECT FIT BUCKET**

| | | | 5.2 m 2-piece offset boom | |
|---|---|---|---|---|
| | | Unit | Arm | |
| | | m | 2.0 | 2.45 |
| A | Max. digging reach | mm | 8 760 | 9 200 |
| B | Max. digging reach on ground | mm | 8 560 | 9 000 |
| C | Max. digging depth | mm | 5 210 | 5 660 |
| C1 | Max. digging depth at max. attachment offset with vertical trench walls | mm | 2 280 | 2 730 |
| C2 | Min. digging depth at max. attachment offset with vertical trench walls | mm | 1 030 | 1 480 |
| D | Max.digging depth (l=2.44m level) | mm | 5 100 | 5 560 |
| E | Max. vertical wall digging depth | mm | 4 000 | 4 410 |
| F | Max. cutting height | mm | 9 570 | 9 880 |
| G | Max. dumping height | mm | 6 700 | 7 000 |
| H | Min. front swing radius | mm | 2 710 | 2 820 |
| J1 | | ° | 35 | 35 |
| J2 | | ° | 36 | 36 |
| K | | mm | 2 120 | 2 120 |
| L | | mm | 2 430 | 2 430 |
| **DIGGING FORCES WITH DIRECT FIT BUCKET** | | | | |
| Breakout force (bucket) | ISO | kN | 108* | 108* |
| Tearout force | ISO | kN | 73* | 63.5* |
| * with powerboost | | | | |
| **Max. recommended sizes for direct fit buckets** | | | | |
| GP-Bucket (1.8t/m³) | | l | 780 | 780 |
| HD-Bucket (2.1t/m³) | | l | 620 | 620 |
| **Max. recommended sizes for quick fit buckets** | | | | |
| S6/S60 QF GP-Bucket (1.8t/m³) | | l | 780 | 700 |
| S6 QF HD-Bucket (2.1t/m³) | | l | 620 | 500 |
| S1 QF GP-Bucket (1.8t/m³) | | l | 620 | 620 |
| S1 QF HD-Bucket (2.1t/m³) | | l | 620 | 500 |

Note: 1. Bucket size based on SAE-J296, heaped material with a 1:1 angle of repose. 2. “Max permitted sizes” are for reference only and are not necessarily available from the factory. 3. “Max permitted sizes” are for heavy counterweight.



**LIFTING CAPACITY EW160E with heavy counterweight**

At the arm end, without bucket and quick fit. For lifting capacity including bucket/quick fit, simply subtract actual weight of those parts from the following values. With heavy couterweight. **Unit: 1 000kg**

| | Lifting point | Reach from machine centre (u = support up/d = support down) | | | | | | | | | | | | | | | | | | | | | | | | |
|---|---|---|---|---|---|---|---|---|---|---|---|---|---|---|---|---|---|---|---|---|---|---|---|---|---|---|
| | | 1.5 m | | | | 3.0 m | | | | 4.5 m | | | | 6.0 m | | | | 7.5 m | | | | Max. | | | | |
| | | Across UC | | Along UC | | Across UC | | Along UC | | Across UC | | Along UC | | Across UC | | Along UC | | Across UC | | Along UC | | Across UC | | Along UC | | Max. |
| | m | u | d | u | d | u | d | u | d | u | d | u | d | u | d | u | d | u | d | u | d | u | d | u | d | m |
| Mono Boom: 5m<br>Dipper arm: 2m<br>Front dozer blade<br>Rear outrigger | 7.5 | - | - | - | - | - | - | - | - | - | - | - | - | - | - | - | - | - | - | - | - | - | - | - | - | - |
| | 6 | - | - | - | - | - | - | - | - | - | - | - | - | - | - | - | - | - | - | - | - | 3.1 | 4* | 4* | 4* | 5.7 |
| | 4.5 | - | - | - | - | - | - | - | - | 4.3 | 5.3* | 5.3* | 5.3* | 2.8 | 4.6 | 4.2 | 4.7* | - | - | - | - | 2.4 | 3.8* | 3.7 | 3.8* | 6.5 |
| | 3 | - | - | - | - | - | - | - | - | 4 | 6.6* | 6.4 | 6.6* | 2.6 | 4.5 | 4.1 | 5.2* | - | - | - | - | 2.1 | 3.6 | 3.3 | 3.9* | 7 |
| | 1.5 | - | - | - | - | - | - | - | - | 3.7 | 6.7 | 6.1 | 7.7* | 2.5 | 4.4 | 4 | 5.7* | - | - | - | - | 2 | 3.4 | 3.1 | 4.1* | 7.1 |
| | 0 | - | - | - | - | - | - | - | - | 3.6 | 6.5 | 5.9 | 8.2* | 2.5 | 4.3 | 3.9 | 6* | - | - | - | - | 2.1 | 3.6 | 3.3 | 4.7* | 6.8 |
| | -1.5 | - | - | - | - | 6.5 | 11.4* | 11.4* | 11.4* | 3.6 | 6.5 | 5.9 | 7.9* | 2.4 | 4.3 | 3.9 | 5.7* | - | - | - | - | 2.3 | 4.1 | 3.7 | 5.4* | 6.2 |
| | -3 | - | - | - | - | 6.7 | 9.4* | 9.4* | 9.4* | 3.7 | 6.6* | 6 | 6.6* | - | - | - | - | - | - | - | - | 3.1 | 5.5* | 5 | 5.5* | 5.1 |
| | -4.5 | - | - | - | - | - | - | - | - | - | - | - | - | - | - | - | - | - | - | - | - | - | - | - | - | - |
| Mono Boom: 5m<br>Dipper arm: 2.45m<br>Front dozer blade<br>Rear outrigger | 7.5 | - | - | - | - | - | - | - | - | - | - | - | - | - | - | - | - | - | - | - | - | 3.7* | 3.7* | 3.7* | 3.7* | 4.8 |
| | 6 | - | - | - | - | - | - | - | - | - | - | - | - | 2.8 | 4* | 4* | 4* | - | - | - | - | 2.7 | 3.2* | 3.2* | 3.2* | 6.2 |
| | 4.5 | - | - | - | - | - | - | - | - | 4.3 | 4.8* | 4.8* | 4.8* | 2.8 | 4.3* | 4.3 | 4.3* | - | - | - | - | 2.1 | 3* | 3* | 3* | 7 |
| | 3 | - | - | - | - | - | - | - | - | 4 | 6.1* | 6.1* | 6.1* | 2.6 | 4.5 | 4.1 | 4.9* | - | - | - | - | 1.9 | 3.1* | 3 | 3.1* | 7.4 |
| | 1.5 | - | - | - | - | - | - | - | - | 3.7 | 6.7 | 6.1 | 7.4* | 2.5 | 4.3 | 4 | 5.5* | 1.8 | 3.1 | 2.9 | 3.3* | 1.8 | 3.1 | 2.9 | 3.2* | 7.5 |
| | 0 | - | - | - | - | 6* | 6* | 6* | 6* | 3.6 | 6.5 | 5.9 | 8.1* | 2.4 | 4.2 | 3.9 | 5.9* | - | - | - | - | 1.9 | 3.2 | 2.9 | 3.6* | 7.3 |
| | -1.5 | 6.2* | 6.2* | 6.2* | 6.2* | 6.4 | 10.9* | 10.9* | 10.9* | 3.5 | 6.5 | 5.9 | 8* | 2.4 | 4.2 | 3.8 | 5.8* | - | - | - | - | 2.1 | 3.6 | 3.3 | 4.4* | 6.7 |
| | -3 | - | - | - | - | 6.5 | 10.3* | 10.3* | 10.3* | 3.6 | 6.5 | 5.9 | 7.1* | - | - | - | - | - | - | - | - | 2.6 | 4.6 | 4.2 | 5.2* | 5.7 |
| | -4.5 | - | - | - | - | - | - | - | - | - | - | - | - | - | - | - | - | - | - | - | - | - | - | - | - | - |
| Mono Boom: 5m<br>Dipper arm: 2.6m<br>Front dozer blade<br>Rear outrigger | 7.5 | - | - | - | - | - | - | - | - | - | - | - | - | - | - | - | - | - | - | - | - | 3.4* | 3.4* | 3.4* | 3.4* | 5 |
| | 6 | - | - | - | - | - | - | - | - | - | - | - | - | 2.8 | 4* | 4* | 4* | - | - | - | - | 2.5 | 2.9* | 2.9* | 2.9* | 6.4 |
| | 4.5 | - | - | - | - | - | - | - | - | 4.4 | 4.6* | 4.6* | 4.6* | 2.8 | 4.2* | 4.2* | 4.2* | - | - | - | - | 2.1 | 2.8* | 2.8* | 2.8* | 7.2 |
| | 3 | - | - | - | - | - | - | - | - | 4 | 5.9* | 5.9* | 5.9* | 2.6 | 4.5 | 4.1 | 4.8* | 1.9 | 3.2 | 2.9 | 3.3* | 1.8 | 2.8* | 2.8* | 2.8* | 7.6 |
| | 1.5 | - | - | - | - | - | - | - | - | 3.7 | 6.7 | 6.1 | 7.2* | 2.5 | 4.3 | 4 | 5.4* | 1.8 | 3.1 | 2.8 | 4.1* | 1.7 | 3* | 2.8 | 3* | 7.6 |
| | 0 | - | - | - | - | 6.2* | 6.2* | 6.2* | 6.2* | 3.5 | 6.5 | 5.9 | 8* | 2.4 | 4.2 | 3.9 | 5.8* | - | - | - | - | 1.8 | 3.1 | 2.8 | 3.4* | 7.4 |
| | -1.5 | 6* | 6* | 6* | 6* | 6.3 | 10.5* | 10.5* | 10.5* | 3.5 | 6.4 | 5.8 | 8.1* | 2.4 | 4.2 | 3.8 | 5.9* | - | - | - | - | 2 | 3.5 | 3.2 | 4.1* | 6.9 |
| | -3 | - | - | - | - | 6.4 | 10.6* | 10.6* | 10.6* | 3.5 | 6.5 | 5.9 | 7.2* | - | - | - | - | - | - | - | - | 2.5 | 4.4 | 4 | 5.1* | 5.9 |
| | -4.5 | - | - | - | - | - | - | - | - | - | - | - | - | - | -* | -* | -* | - | - | - | - | - | - | -* | -* | - |
| Mono Boom: 5m<br>Dipper arm: 3.1m<br>Front dozer blade<br>Rear outrigger | 7.5 | - | - | - | - | - | - | - | - | - | - | - | - | - | - | - | - | - | - | - | - | 2.6* | 2.6* | 2.6* | 2.6* | 5.7 |
| | 6 | - | - | - | - | - | - | - | - | - | - | - | - | 2.9 | 3.5* | 3.5* | 3.5* | - | - | - | - | 2.2 | 2.4* | 2.4* | 2.4* | 6.9 |
| | 4.5 | - | - | - | - | - | - | - | - | - | - | - | - | 2.8 | 3.8* | 3.8* | 3.8* | 1.9 | 2.9* | 2.9* | 2.9* | 1.8 | 2.3* | 2.3* | 2.3* | 7.7 |
| | 3 | - | - | - | - | 7.6 | 7.7* | 7.7* | 7.7* | 4.1 | 5.3* | 5.3* | 5.3* | 2.7 | 4.4* | 4.2 | 4.4* | 1.9 | 3.2 | 2.9 | 4* | 1.6 | 2.3* | 2.3* | 2.3* | 8 |
| | 1.5 | - | - | - | - | - | - | - | - | 3.8 | 6.8* | 6.2 | 6.8* | 2.5 | 4.4 | 4 | 5.1* | 1.8 | 3.1 | 2.8 | 4.3* | 1.6 | 2.4* | 2.4* | 2.4* | 8.1 |
| | 0 | - | - | - | - | 6.3 | 6.6* | 6.6* | 6.6* | 3.5 | 6.5 | 5.9 | 7.8* | 2.4 | 4.2 | 3.8 | 5.7* | 1.7 | 3 | 2.8 | 4.5* | 1.6 | 2.7* | 2.6 | 2.7* | 7.9 |
| | -1.5 | 5.3* | 5.3* | 5.3* | 5.3* | 6.2 | 9.6* | 9.6* | 9.6* | 3.4 | 6.4 | 5.8 | 8.1* | 2.3 | 4.1 | 3.8 | 5.9* | - | - | - | - | 1.7 | 3.1 | 2.8 | 3.1* | 7.4 |
| | -3 | 9* | 9* | 9* | 9* | 6.3 | 11.3* | 11.3* | 11.3* | 3.5 | 6.4 | 5.8 | 7.6* | 2.3 | 4.2 | 3.8 | 5.4* | - | - | - | - | 2.1 | 3.7 | 3.4 | 4.2* | 6.5 |
| | -4.5 | - | - | - | - | 6.6 | 8.6* | 8.6* | 8.6* | 3.6 | 5.7* | 5.7* | 5.7* | - | - | - | - | - | - | - | - | 3.2 | 4.8* | 4.8* | 4.8* | 4.9 |
| Mono Boom: 5m<br>Grab Arm: 2.95m<br>Front dozer blade<br>Rear outrigger | 7.5 | - | - | - | - | - | - | - | - | - | - | - | - | - | - | - | - | - | - | - | - | 3.2* | 3.2* | 3.2* | 3.2* | 5.6 |
| | 6 | - | - | - | - | - | - | - | - | - | - | - | - | 3.1 | 4* | 4* | 4* | - | - | - | - | 2.5 | 2.8* | 2.8* | 2.8* | 6.8 |
| | 4.5 | - | - | - | - | - | - | - | - | - | - | - | - | 3 | 4.2* | 4.2* | 4.2* | 2.1 | 3.1* | 3.1* | 3.1* | 2.1 | 2.7* | 2.7* | 2.7* | 7.6 |
| | 3 | - | - | - | - | - | - | - | - | 4.3 | 5.8* | 5.8* | 5.8* | 2.9 | 4.8 | 4.4 | 4.8* | 2.1 | 3.4 | 3.2 | 4.4* | 1.9 | 2.7* | 2.7* | 2.7* | 8 |
| | 1.5 | - | - | - | - | - | - | - | - | 4 | 7 | 6.4 | 7.2* | 2.8 | 4.6 | 4.2 | 5.5* | 2 | 3.3 | 3.1 | 4.7* | 1.8 | 2.8* | 2.8 | 2.8* | 8 |
| | 0 | - | - | - | - | 6.1* | 6.1* | 6.1* | 6.1* | 3.8 | 6.8 | 6.2 | 8.2* | 2.6 | 4.5 | 4.1 | 6* | 2 | 3.3 | 3 | 4.9* | 1.9 | 3* | 2.9 | 3* | 7.8 |
| | -1.5 | 5.3* | 5.3* | 5.3* | 5.3* | 6.6 | 9.6* | 9.6* | 9.6* | 3.7 | 6.7 | 6.1 | 8.4* | 2.6 | 4.4 | 4 | 6.2* | - | - | - | - | 2 | 3.4 | 3.1 | 3.5* | 7.3 |
| | -3 | 9.3* | 9.3* | 9.3* | 9.3* | 6.7 | 11.4* | 11.4* | 11.4* | 3.8 | 6.7 | 6.1 | 7.8* | 2.6 | 4.4 | 4.1 | 5.6* | - | - | - | - | 2.4 | 4.1 | 3.8 | 4.5* | 6.4 |
| | -4.5 | - | - | - | - | - | - | - | - | 3.9 | 5.6* | 5.6* | 5.6* | - | - | - | - | - | - | - | - | 3.8 | 5.4* | 5.4* | 5.4* | 4.6 |
| Mono Boom: 5m<br>Arm: 2m<br>Front and rear<br>outriggers | 7.5 | - | - | - | - | - | - | - | - | - | - | - | - | - | - | - | - | - | - | - | - | - | - | - | - | - |
| | 6 | - | - | - | - | - | - | - | - | - | - | - | - | - | - | - | - | - | - | - | - | 3.1 | 4* | 4* | 4* | 5.7 |
| | 4.5 | - | - | - | - | - | - | - | - | 4.3 | 5.3* | 5.3* | 5.3* | 2.8 | 4.7* | 4.2 | 4.7* | - | - | - | - | 2.4 | 3.8* | 3.7 | 3.8* | 6.5 |
| | 3 | - | - | - | - | - | - | - | - | 4 | 6.6* | 6.4 | 6.6* | 2.7 | 5.2* | 4.1 | 5.2* | - | - | - | - | 2.1 | 3.9* | 3.2 | 3.9* | 7 |
| | 1.5 | - | - | - | - | - | - | - | - | 3.8 | 7.7* | 6.1 | 7.7* | 2.6 | 5.6 | 4 | 5.7* | - | - | - | - | 2 | 4.1* | 3.1 | 4.1* | 7.1 |
| | 0 | - | - | - | - | - | - | - | - | 3.6 | 8.2* | 5.9 | 8.2* | 2.5 | 5.5 | 3.9 | 6* | - | - | - | - | 2.1 | 4.6 | 3.2 | 4.7* | 6.8 |
| | -1.5 | - | - | - | - | 6.6 | 11.4* | 11.4* | 11.4* | 3.6 | 7.9* | 5.9 | 7.9* | 2.5 | 5.5 | 3.9 | 5.7* | - | - | - | - | 2.4 | 5.2 | 3.7 | 5.4* | 6.2 |
| | -3 | - | - | - | - | 6.8 | 9.4* | 9.4* | 9.4* | 3.7 | 6.6* | 6 | 6.6* | - | - | - | - | - | - | - | - | 3.2 | 5.5* | 5 | 5.5* | 5.1 |
| | -4.5 | - | - | - | - | - | - | - | - | - | - | - | - | - | - | - | - | - | - | - | - | - | - | - | - | - |

Notes: 1. Working pressure with Power Boost = 37.5 MPa. 2. The above values are in compliance with ISO standard 10 567. They do not exceed 87 % of hydraulic lifting capacity or 75 % of tipping load, with the machine on firm, level ground. 3. Load capacities marked with an asterisk (*) are limited by machine's hydraulic lifting capacity rather than tipping load.

# Specifications

## LIFTING CAPACITY EW160E with heavy counterweight

At the arm end, without bucket and quick fit. For lifting capacity including bucket/quick fit, simply subtract actual weight of those parts from the following values. With heavy couterweight. **Unit: 1 000kg**

| | Lifting point | Reach from machine centre (u = support up/d = support down) | | | | | | | | | | | | | | | | | | | | | | | | |
|---|---|---|---|---|---|---|---|---|---|---|---|---|---|---|---|---|---|---|---|---|---|---|---|---|---|---|
| | | 1.5 m | | | | 3.0 m | | | | 4.5 m | | | | 6.0 m | | | | 7.5 m | | | | Max. | | | | |
| | | Across UC | | Along UC | | Across UC | | Along UC | | Across UC | | Along UC | | Across UC | | Along UC | | Across UC | | Along UC | | Across UC | | Along UC | | Max. |
| | m | u | d | u | d | u | d | u | d | u | d | u | d | u | d | u | d | u | d | u | d | u | d | u | d | m |
| Mono Boom: 5m<br>Dipper arm: 2.45m<br>Front and rear outriggers | 7.5 | - | - | - | - | - | - | - | - | - | - | - | - | - | - | - | - | - | - | - | - | 3.7* | 3.7* | 3.7* | 3.7* | 4.8 |
| | 6 | - | - | - | - | - | - | - | - | - | - | - | - | 2.8 | 4* | 4* | 4* | - | - | - | - | 2.7 | 3.2* | 3.2* | 3.2* | 6.2 |
| | 4.5 | - | - | - | - | - | - | - | - | 4.4 | 4.8* | 4.8* | 4.8* | 2.8 | 4.3* | 4.2 | 4.3* | - | - | - | - | 2.2 | 3* | 3* | 3* | 7 |
| | 3 | - | - | - | - | - | - | - | - | 4.1 | 6.1* | 6.1* | 6.1* | 2.7 | 4.9* | 4.1 | 4.9* | - | - | - | - | 1.9 | 3.1* | 2.9 | 3.1* | 7.4 |
| | 1.5 | - | - | - | - | - | - | - | - | 3.8 | 7.4* | 6.1 | 7.4* | 2.5 | 5.5* | 4 | 5.5* | 1.8 | 3.3* | 2.8 | 3.3* | 1.8 | 3.2* | 2.8 | 3.2* | 7.5 |
| | 0 | - | - | - | - | 6* | 6* | 6* | 6* | 3.6 | 8.1* | 5.9 | 8.1* | 2.4 | 5.5 | 3.8 | 5.9* | - | - | - | - | 1.9 | 3.6* | 2.9 | 3.6* | 7.3 |
| | -1.5 | 6.2* | 6.2* | 6.2* | 6.2* | 6.4 | 10.9* | 10.9* | 10.9* | 3.6 | 8* | 5.8 | 8* | 2.4 | 5.4 | 3.8 | 5.8* | - | - | - | - | 2.1 | 4.4* | 3.3 | 4.4* | 6.7 |
| | -3 | - | - | - | - | 6.6 | 10.3* | 10.3* | 10.3* | 3.6 | 7.1* | 5.9 | 7.1* | - | - | - | - | - | - | - | - | 2.7 | 5.2* | 4.2 | 5.2* | 5.7 |
| | -4.5 | - | - | - | - | - | - | - | - | - | - | - | - | - | - | - | - | - | - | - | - | - | - | - | - | - |
| Mono Boom: 5m<br>Dipper arm: 2.6m<br>Front and rear outriggers | 7.5 | - | - | - | - | - | - | - | - | - | - | - | - | - | - | - | - | - | - | - | - | 3.4* | 3.4* | 3.4* | 3.4* | 5 |
| | 6 | - | - | - | - | - | - | - | - | - | - | - | - | 2.9 | 4* | 4* | 4* | - | - | - | - | 2.6 | 2.9* | 2.9* | 2.9* | 6.4 |
| | 4.5 | - | - | - | - | - | - | - | - | 4.4 | 4.6* | 4.6* | 4.6* | 2.8 | 4.2* | 4.2* | 4.2* | - | - | - | - | 2.1 | 2.8* | 2.8* | 2.8* | 7.2 |
| | 3 | - | - | - | - | - | - | - | - | 4.1 | 5.9* | 5.9* | 5.9* | 2.7 | 4.8* | 4.1 | 4.8* | 1.9 | 3.3* | 2.9 | 3.3* | 1.9 | 2.8* | 2.8* | 2.8* | 7.6 |
| | 1.5 | - | - | - | - | - | - | - | - | 3.8 | 7.2* | 6.1 | 7.2* | 2.5 | 5.4* | 3.9 | 5.4* | 1.8 | 4 | 2.8 | 4.1* | 1.8 | 3* | 2.7 | 3* | 7.6 |
| | 0 | - | - | - | - | 6.2* | 6.2* | 6.2* | 6.2* | 3.6 | 8* | 5.9 | 8* | 2.4 | 5.5 | 3.8 | 5.8* | - | - | - | - | 1.8 | 3.4* | 2.8 | 3.4* | 7.4 |
| | -1.5 | 6* | 6* | 6* | 6* | 6.4 | 10.5* | 10.5* | 10.5* | 3.5 | 8.1* | 5.8 | 8.1* | 2.4 | 5.4 | 3.8 | 5.9* | - | - | - | - | 2 | 4.1* | 3.2 | 4.1* | 6.9 |
| | -3 | - | - | - | - | 6.5 | 10.6* | 10.6* | 10.6* | 3.6 | 7.2* | 5.9 | 7.2* | - | - | - | - | - | - | - | - | 2.5 | 5.1* | 4 | 5.1* | 5.9 |
| | -4.5 | - | - | - | - | - | - | - | - | - | - | - | - | - | -* | -* | -* | - | - | - | - | - | - | - | - | - |
| Mono Boom: 5m<br>Dipper arm: 3.1m<br>Front and rear outriggers | 7.5 | - | - | - | - | - | - | - | - | - | - | - | - | - | - | - | - | - | - | - | - | 2.6* | 2.6* | 2.6* | 2.6* | 5.7 |
| | 6 | - | - | - | - | - | - | - | - | - | - | - | - | 2.9 | 3.5* | 3.5* | 3.5* | - | - | - | - | 2.2 | 2.4* | 2.4* | 2.4* | 6.9 |
| | 4.5 | - | - | - | - | - | - | - | - | - | - | - | - | 2.8 | 3.8* | 3.8* | 3.8* | 1.9 | 2.9* | 2.9* | 2.9* | 1.9 | 2.3* | 2.3* | 2.3* | 7.7 |
| | 3 | - | - | - | - | 7.7 | 7.7* | 7.7* | 7.7* | 4.2 | 5.3* | 5.3* | 5.3* | 2.7 | 4.4* | 4.1 | 4.4* | 1.9 | 4* | 2.9 | 4* | 1.7 | 2.3* | 2.3* | 2.3* | 8 |
| | 1.5 | - | - | - | - | - | - | - | - | 3.8 | 6.8* | 6.1 | 6.8* | 2.5 | 5.1* | 4 | 5.1* | 1.8 | 4 | 2.8 | 4.3* | 1.6 | 2.4* | 2.4* | 2.4* | 8.1 |
| | 0 | - | - | - | - | 6.4 | 6.6* | 6.6* | 6.6* | 3.6 | 7.8* | 5.9 | 7.8* | 2.4 | 5.5 | 3.8 | 5.7* | 1.8 | 3.9 | 2.8 | 4.5* | 1.6 | 2.7* | 2.6 | 2.7* | 7.9 |
| | -1.5 | 5.3* | 5.3* | 5.3* | 5.3* | 6.3 | 9.6* | 9.6* | 9.6* | 3.5 | 8.1* | 5.8 | 8.1* | 2.3 | 5.4 | 3.8 | 5.9* | - | - | - | - | 1.8 | 3.1* | 2.8 | 3.1* | 7.4 |
| | -3 | 9* | 9* | 9* | 9* | 6.4 | 11.3* | 11.3* | 11.3* | 3.5 | 7.6* | 5.8 | 7.6* | 2.4 | 5.4 | 3.8 | 5.4* | - | - | - | - | 2.2 | 4.2* | 3.4 | 4.2* | 6.5 |
| | -4.5 | - | - | - | - | 6.7 | 8.6* | 8.6* | 8.6* | 3.7 | 5.7* | 5.7* | 5.7* | - | - | - | - | - | - | - | - | 3.2 | 4.8* | 4.8* | 4.8* | 4.9 |
| Mono Boom: 5m<br>Grab arm: 2.95m<br>Front and rear outriggers | 7.5 | - | - | - | - | - | - | - | - | - | - | - | - | - | - | - | - | - | - | - | - | 3.2* | 3.2* | 3.2* | 3.2* | 5.6 |
| | 6 | - | - | - | - | - | - | - | - | - | - | - | - | 3.1 | 4* | 4* | 4* | - | - | - | - | 2.5 | 2.8* | 2.8* | 2.8* | 6.8 |
| | 4.5 | - | - | - | - | - | - | - | - | - | - | - | - | 3.1 | 4.2* | 4.2* | 4.2* | 2.2 | 3.1* | 3.1* | 3.1* | 2.1 | 2.7* | 2.7* | 2.7* | 7.6 |
| | 3 | - | - | - | - | - | - | - | - | 4.4 | 5.8* | 5.8* | 5.8* | 2.9 | 4.8* | 4.4 | 4.8* | 2.1 | 4.3 | 3.1 | 4.4* | 1.9 | 2.7* | 2.7* | 2.7* | 8 |
| | 1.5 | - | - | - | - | - | - | - | - | 4.1 | 7.2* | 6.4 | 7.2* | 2.8 | 5.5* | 4.2 | 5.5* | 2.1 | 4.2 | 3.1 | 4.7* | 1.9 | 2.8* | 2.8 | 2.8* | 8 |
| | 0 | - | - | - | - | 6.1* | 6.1* | 6.1* | 6.1* | 3.9 | 8.2* | 6.1 | 8.2* | 2.7 | 5.7 | 4.1 | 6* | 2 | 4.2 | 3 | 4.9* | 1.9 | 3* | 1.8 | 3* | 7.8 |
| | -1.5 | 5.3* | 5.3* | 5.3* | 5.3* | 6.6 | 9.6* | 9.6* | 9.6* | 3.8 | 8.4* | 6 | 8.4* | 2.6 | 5.7 | 4 | 6.2* | - | - | - | - | 2.1 | 3.5* | 3.1 | 3.5* | 7.3 |
| | -3 | 9.3* | 9.3* | 9.3* | 9.3* | 6.7 | 11.4* | 11.4* | 11.4* | 3.8 | 7.8* | 6.1 | 7.8* | 2.6 | 5.6* | 4.1 | 5.6* | - | - | - | - | 2.5 | 4.5* | 3.8 | 4.5* | 6.4 |
| | -4.5 | - | - | - | - | - | - | - | - | 4 | 5.6* | 5.6* | 5.6* | - | - | - | - | - | - | - | - | 3.9 | 5.4* | 5.4* | 5.4* | 4.6 |
| Mono Boom: 5m<br>Dipper Arm: 2m<br>Rear dozer blade | 7.5 | - | - | - | - | - | - | - | - | - | - | - | - | - | - | - | - | - | - | - | - | - | - | - | - | - |
| | 6 | - | - | - | - | - | - | - | - | - | - | - | - | - | - | - | - | - | - | - | - | 2.9 | 3.3 | 4* | 4* | 5.7 |
| | 4.5 | - | - | - | - | - | - | - | - | 4.1 | 4.6 | 5.3* | 5.3* | 2.6 | 2.9 | 4.2 | 4.7* | - | - | - | - | 2.2 | 2.5 | 3.7 | 3.8* | 6.5 |
| | 3 | - | - | - | - | - | - | - | - | 3.8 | 4.3 | 6.4 | 6.6* | 2.5 | 2.8 | 4.1 | 5.2* | - | - | - | - | 2 | 2.2 | 3.2 | 3.9* | 7 |
| | 1.5 | - | - | - | - | - | - | - | - | 3.5 | 4 | 6.1 | 7.7* | 2.4 | 2.7 | 4 | 5.7* | - | - | - | - | 1.9 | 2.1 | 3.1 | 4.1* | 7.1 |
| | 0 | - | - | - | - | - | - | - | - | 3.4 | 3.9 | 5.9 | 8.2* | 2.3 | 2.6 | 3.9 | 6* | - | - | - | - | 1.9 | 2.2 | 3.2 | 4.7* | 6.8 |
| | -1.5 | - | - | - | - | 6.1 | 7.2 | 11.4* | 11.4* | 3.4 | 3.9 | 5.9 | 7.9* | 2.3 | 2.6 | 3.9 | 5.7* | - | - | - | - | 2.2 | 2.5 | 3.7 | 5.4* | 6.2 |
| | -3 | - | - | - | - | 6.3 | 7.4 | 9.4* | 9.4* | 3.5 | 4 | 6 | 6.6* | - | - | - | - | - | - | - | - | 3 | 3.4 | 5 | 5.5* | 5.1 |
| | -4.5 | - | - | - | - | - | - | - | - | - | - | - | - | - | - | - | - | - | - | - | - | - | - | - | - | - |
| Mono Boom: 5m<br>Arm: 2.45m<br>Rear dozer blade | 7.5 | - | - | - | - | - | - | - | - | - | - | - | - | - | - | - | - | - | - | - | - | 3.7* | 3.7* | 3.7* | 3.7* | 4.8 |
| | 6 | - | - | - | - | - | - | - | - | - | - | - | - | 2.7 | 3 | 4* | 4* | - | - | - | - | 2.5 | 2.8 | 3.2* | 3.2* | 6.2 |
| | 4.5 | - | - | - | - | - | - | - | - | 4.1 | 4.6 | 4.8* | 4.8* | 2.6 | 3 | 4.2 | 4.3* | - | - | - | - | 2 | 2.3 | 3* | 3* | 7 |
| | 3 | - | - | - | - | - | - | - | - | 3.8 | 4.3 | 6.1* | 6.1* | 2.5 | 2.8 | 4.1 | 4.9* | - | - | - | - | 1.8 | 2 | 2.9 | 3.1* | 7.4 |
| | 1.5 | - | - | - | - | - | - | - | - | 3.5 | 4 | 6.1 | 7.4* | 2.4 | 2.7 | 4 | 5.5* | 1.7 | 1.9 | 2.8 | 3.3* | 1.7 | 1.9 | 2.8 | 3.2* | 7.5 |
| | 0 | - | - | - | - | 6 | 6* | 6* | 6* | 3.3 | 3.8 | 5.9 | 8.1* | 2.3 | 2.6 | 3.8 | 5.9* | - | - | - | - | 1.7 | 2 | 2.9 | 3.6* | 7.3 |
| | -1.5 | 6.2* | 6.2* | 6.2* | 6.2* | 6 | 7 | 10.9* | 10.9* | 3.3 | 3.8 | 5.8 | 8* | 2.2 | 2.6 | 3.8 | 5.8* | - | - | - | - | 1.9 | 2.2 | 3.3 | 4.4* | 6.7 |
| | -3 | - | - | - | - | 6.1 | 7.2 | 10.3* | 10.3* | 3.4 | 3.9 | 5.9 | 7.1* | - | - | - | - | - | - | - | - | 2.5 | 2.8 | 4.2 | 5.2* | 5.7 |
| | -4.5 | - | - | - | - | - | - | - | - | - | - | - | - | - | - | - | - | - | - | - | - | - | - | - | - | - |

Notes: 1. Working pressure with Power Boost = 37.5 MPa. 2. The above values are in compliance with ISO standard 10 567. They do not exceed 87 % of hydraulic lifting capacity or 75 % of tipping load, with the machine on firm, level ground. 3. Load capacities marked with an asterisk (*) are limited by machine's hydraulic lifting capacity rather than tipping load.



## LIFTING CAPACITY EW160E with heavy counterweight

At the arm end, without bucket and quick fit. For lifting capacity including bucket/quick fit, simply subtract actual weight of those parts from the following values. With heavy couterweight. **Unit: 1 000kg**

| | Lifting point | Reach from machine centre (u = support up/d = support down) | | | | | | | | | | | | | | | | | | | | | | | | |
|---|---|---|---|---|---|---|---|---|---|---|---|---|---|---|---|---|---|---|---|---|---|---|---|---|---|---|
| | | 1.5 m | | | | 3.0 m | | | | 4.5 m | | | | 6.0 m | | | | 7.5 m | | | | Max. | | | | |
| | | Across UC | | Along UC | | Across UC | | Along UC | | Across UC | | Along UC | | Across UC | | Along UC | | Across UC | | Along UC | | Across UC | | Along UC | | Max. |
| | m | u | d | u | d | u | d | u | d | u | d | u | d | u | d | u | d | u | d | u | d | u | d | u | d | m |
| Mono Boom: 5m<br>Dipper arm: 2.6m<br>Rear dozer blade | 7.5 | - | - | - | - | - | - | - | - | - | - | - | - | - | - | - | - | - | - | - | - | 3.4* | 3.4* | 3.4* | 3.4* | 5 |
| | 6 | - | - | - | - | - | - | - | - | - | - | - | - | 2.7 | 3 | 4* | 4* | - | - | - | - | 2.4 | 2.7 | 2.9* | 2.9* | 6.4 |
| | 4.5 | - | - | - | - | - | - | - | - | 4.1 | 4.6* | 4.6* | 4.6* | 2.6 | 3 | 4.2* | 4.2* | - | - | - | - | 1.9 | 2.2 | 2.8* | 2.8* | 7.2 |
| | 3 | - | - | - | - | - | - | - | - | 3.8 | 4.3 | 5.9* | 5.9* | 2.5 | 2.8 | 4.1 | 4.8* | 1.7 | 2 | 2.9 | 3.3* | 1.7 | 1.9 | 2.8* | 2.8* | 7.6 |
| | 1.5 | - | - | - | - | - | - | - | - | 3.5 | 4 | 6.1 | 7.2* | 2.3 | 2.7 | 4 | 5.4* | 1.7 | 1.9 | 2.8 | 4.1* | 1.6 | 1.9 | 2.7 | 3* | 7.6 |
| | 0 | - | - | - | - | 5.9 | 6.2* | 6.2* | 6.2* | 3.3 | 3.8 | 5.9 | 8* | 2.2 | 2.6 | 3.8 | 5.8* | - | - | - | - | 1.7 | 1.9 | 2.8 | 3.4* | 7.4 |
| | -1.5 | 6* | 6* | 6* | 6* | 5.9 | 7 | 10.5* | 10.5* | 3.3 | 3.8 | 5.8 | 8.1* | 2.2 | 2.5 | 3.8 | 5.9* | - | - | - | - | 1.9 | 2.1 | 3.2 | 4.1* | 6.9 |
| | -3 | - | - | - | - | 6.1 | 7.1 | 10.6* | 10.6* | 3.3 | 3.8 | 5.9 | 7.2* | - | - | - | - | - | - | - | - | 2.3 | 2.7 | 4 | 5.1* | 5.9 |
| | -4.5 | - | - | - | - | - | - | - | - | - | - | - | - | - | - | - | - | - | - | - | - | - | - | - | - | - |
| Mono Boom: 5m<br>Dipper arm: 3.1m<br>Rear dozer blade | 7.5 | - | - | - | - | - | - | - | - | - | - | - | - | - | - | - | - | - | - | - | - | 2.6* | 2.6* | 2.6* | 2.6* | 5.7 |
| | 6 | - | - | - | - | - | - | - | - | - | - | - | - | 2.7 | 3.1 | 3.5* | 3.5* | - | - | - | - | 2.1 | 2.4 | 2.4* | 2.4* | 6.9 |
| | 4.5 | - | - | - | - | - | - | - | - | - | - | - | - | 2.7 | 3 | 3.8* | 3.8* | 1.8 | 2 | 2.9* | 2.9* | 1.7 | 2 | 2.3* | 2.3* | 7.7 |
| | 3 | - | - | - | - | 7.2 | 7.7* | 7.7* | 7.7* | 3.9 | 4.4 | 5.3* | 5.3* | 2.5 | 2.9 | 4.1 | 4.4* | 1.7 | 2 | 2.9 | 4* | 1.5 | 1.8 | 2.3* | 2.3* | 8 |
| | 1.5 | - | - | - | - | - | - | - | - | 3.6 | 4.1 | 6.1 | 6.8* | 2.4 | 2.7 | 4 | 5.1* | 1.7 | 1.9 | 2.8 | 4.3* | 1.5 | 1.7 | 2.4* | 2.4* | 8.1 |
| | 0 | - | - | - | - | 5.9 | 6.6* | 6.6* | 6.6* | 3.3 | 3.8 | 5.9 | 7.8* | 2.2 | 2.6 | 3.8 | 5.7* | 1.6 | 1.9 | 2.8 | 4.5* | 1.5 | 1.7 | 2.6 | 2.7* | 7.9 |
| | -1.5 | 5.3* | 5.3* | 5.3* | 5.3* | 5.8 | 6.9 | 9.6* | 9.6* | 3.2 | 3.7 | 5.8 | 8.1* | 2.2 | 2.5 | 3.8 | 5.9* | - | - | - | - | 1.6 | 1.9 | 2.8 | 3.1* | 7.4 |
| | -3 | 9* | 9* | 9* | 9* | 5.9 | 7 | 11.3* | 11.3* | 3.2 | 3.7 | 5.8 | 7.6* | 2.2 | 2.5 | 3.8 | 5.4* | - | - | - | - | 2 | 2.3 | 3.4 | 4.2* | 6.5 |
| | -4.5 | - | - | - | - | 6.2 | 7.3 | 8.6* | 8.6* | 3.4 | 3.9 | 5.7* | 5.7* | - | - | - | - | - | - | - | - | 3 | 3.4 | 4.8* | 4.8* | 4.9 |
| Mono Boom: 5m<br>Grab arm: 2.95m<br>Rear dozer blade | 7.5 | - | - | - | - | - | - | - | - | - | - | - | - | - | - | - | - | - | - | - | - | 3.2* | 2.1 | 3.2* | 3.2* | 5.6 |
| | 6 | - | - | - | - | - | - | - | - | - | - | - | - | 2.9 | 2 | 4* | 4* | - | - | - | - | 2.4 | 1.5 | 2.8* | 2.8* | 6.8 |
| | 4.5 | - | - | - | - | - | - | - | - | - | - | - | - | 2.9 | 1.9 | 4.2* | 4.2* | 2 | 1.3 | 3.1* | 3.1* | 2 | 1.3 | 2.7* | 2.7* | 7.6 |
| | 3 | - | - | - | - | - | - | - | - | 4.1 | 2.7 | 5.8* | 5.8* | 2.8 | 1.8 | 4.4 | 4.8* | 2 | 1.3 | 3.1 | 4.4* | 1.8 | 1.1 | 2.7* | 2.7* | 8 |
| | 1.5 | - | - | - | - | - | - | - | - | 3.8 | 2.4 | 6.4 | 7.2* | 2.6 | 1.7 | 4.2 | 5.5* | 1.9 | 1.2 | 3.1 | 4.7* | 1.7 | 1.1 | 2.8 | 2.8* | 8 |
| | 0 | - | - | - | - | 6.1* | 3.5 | 6.1* | 6.1* | 3.6 | 2.2 | 6.1 | 8.2* | 2.5 | 1.5 | 4.1 | 6* | 1.9 | 1.2 | 3 | 4.9* | 1.8 | 1.1 | 2.8 | 3* | 7.8 |
| | -1.5 | 5.3* | 5.3* | 5.3* | 5.3* | 6.2 | 3.5 | 9.6* | 9.6* | 3.5 | 2.1 | 6 | 8.4* | 2.4 | 1.5 | 4 | 6.2* | - | - | - | - | 1.9 | 1.2 | 3.1 | 3.5* | 7.3 |
| | -3 | 9.3* | 9.3* | 9.3* | 9.3* | 6.3 | 3.6 | 11.4* | 11.4* | 3.5 | 2.1 | 6.1 | 7.8* | 2.5 | 1.5 | 4.1 | 5.6* | - | - | - | - | 2.3 | 1.4 | 3.8 | 4.5* | 6.4 |
| | -4.5 | - | - | - | - | - | - | - | - | 3.7 | 2.3 | 5.6* | 5.6* | - | - | - | - | - | - | - | - | 3.6 | 2.2 | 5.4* | 5.4* | 4.6 |
| 2-piece Boom: 5.1m<br>Dipper arm: 2m<br>Front dozer blade<br>Rear outriggers | 7.5 | - | - | - | - | - | - | - | - | - | - | - | - | - | - | - | - | - | - | - | - | 4.7 | 5.2* | 5.3* | 5.2* | 4.3 |
| | 6 | - | - | - | - | - | - | - | - | 4.5 | 4.8* | 4.8* | 4.8* | - | - | - | - | - | - | - | - | 2.9 | 4.4* | 4.4* | 4.4* | 5.8 |
| | 4.5 | - | - | - | - | 7.5* | 7.4* | 7.5* | 7.4* | 4.3 | 5.5* | 5.6* | 5.5* | 2.7 | 4.6 | 4.2 | 4.9* | - | - | - | - | 2.3 | 3.9 | 3.5 | 4.2* | 6.7 |
| | 3 | - | - | - | - | - | - | - | - | 3.9 | 6.8* | 6.4 | 6.8* | 2.6 | 4.5 | 4.1 | 5.3* | - | - | - | - | 2 | 3.4 | 3.2 | 4.2* | 7.1 |
| | 1.5 | - | - | - | - | - | - | - | - | 3.7 | 6.7 | 6.1 | 8* | 2.5 | 4.4 | 4 | 5.9* | - | - | - | - | 1.9 | 3.3 | 3 | 4.4* | 7.2 |
| | 0 | - | - | - | - | - | - | - | - | 3.6 | 6.5 | 5.9 | 8.4* | 2.4 | 4.3 | 3.9 | 6.1* | - | - | - | - | 2 | 3.5 | 3.2 | 5* | 7 |
| | -1.5 | - | - | - | - | 6.5 | 10.4 | 10.4* | 10.4* | 3.5 | 6.5 | 5.9 | 8* | 2.4 | 4.3 | 3.9 | 5.8* | - | - | - | - | 2.3 | 3.9 | 3.6 | 5.3* | 6.4 |
| | -3 | - | - | - | - | - | - | - | - | - | - | - | - | - | - | - | - | - | - | - | - | - | - | - | - | - |
| | -4.5 | - | - | - | - | - | - | - | - | - | - | - | - | - | - | - | - | - | - | - | - | - | - | - | - | - |
| 2-piece Boom: 5.1m<br>Dipper Arm: 2.45m<br>Front dozer blade<br>Rear outriggers | 7.5 | - | - | - | - | - | - | - | - | 4.4* | 4.4* | 4.4* | 4.4* | - | - | - | - | - | - | - | - | 3.7 | 4* | 4* | 4* | 5 |
| | 6 | - | - | - | - | - | - | - | - | 4.2* | 4.2* | 4.2* | 4.2* | 2.8 | 4.3* | 4.3* | 4.3* | - | - | - | - | 2.5 | 3.5* | 3.5* | 3.5* | 6.4 |
| | 4.5 | - | - | - | - | - | - | - | - | 4.3 | 5* | 5* | 5* | 2.8 | 4.5* | 4.3 | 4.5* | - | - | - | - | 2 | 3.3* | 3.2 | 3.3* | 7.2 |
| | 3 | - | - | - | - | - | - | - | - | 4 | 6.3* | 6.3* | 6.3* | 2.6 | 4.5 | 4.1 | 5* | 1.8 | 3.2 | 2.9 | 3.8* | 1.8 | 3.1 | 2.9 | 3.3* | 7.6 |
| | 1.5 | - | - | - | - | - | - | - | - | 3.7 | 6.7 | 6.1 | 7.6* | 2.5 | 4.3 | 4 | 5.6* | 1.8 | 3.1 | 2.9 | 4.7* | 1.7 | 3 | 2.8 | 3.5* | 7.7 |
| | 0 | - | - | - | - | - | - | - | - | 3.5 | 6.5 | 5.9 | 8.3* | 2.4 | 4.2 | 3.9 | 6* | - | - | - | - | 1.8 | 3.1 | 2.9 | 3.9* | 7.4 |
| | -1.5 | - | - | - | - | 6.3 | 9.4* | 9.4* | 9.4* | 3.5 | 6.4 | 5.8 | 8.2* | 2.4 | 4.2 | 3.8 | 6* | - | - | - | - | 2 | 3.5 | 3.2 | 4.6* | 6.9 |
| | -3 | - | - | - | - | - | - | - | - | 3.6 | 6.5 | 5.9 | 7.2* | - | - | - | - | - | - | - | - | 2.7 | 4.8 | 4.4 | 5.6* | 5.5 |
| | -4.5 | - | - | - | - | - | - | - | - | - | - | - | - | - | - | - | - | - | - | - | - | - | - | - | - | - |
| 2-piece Boom: 5.1m<br>Dipper Arm: 2.6m<br>Front dozer blade<br>Rear outriggers | 7.5 | - | - | - | - | - | - | - | - | - | - | - | - | - | - | - | - | - | - | - | - | 3.5 | 3.7* | 3.7* | 3.7* | 5.2 |
| | 6 | - | - | - | - | - | - | - | - | - | - | - | - | 2.8 | 4.1* | 4.1* | 4.1* | - | - | - | - | 2.4 | 3.2* | 3.2* | 3.2* | 6.5 |
| | 4.5 | - | - | - | - | - | - | - | - | 4.3 | 4.8* | 4.8* | 4.8* | 2.8 | 4.4* | 4.3 | 4.4* | - | - | - | - | 2 | 3.1* | 3.1 | 3.1* | 7.3 |
| | 3 | - | - | - | - | - | - | - | - | 4 | 6.2* | 6.2* | 6.2* | 2.6 | 4.5 | 4.1 | 4.9* | 1.8 | 3.2 | 2.9 | 4.3* | 1.8 | 3 | 2.8 | 3.1* | 7.7 |
| | 1.5 | - | - | - | - | - | - | - | - | 3.7 | 6.7 | 6.1 | 7.5* | 2.5 | 4.3 | 4 | 5.5* | 1.8 | 3.1 | 2.8 | 4.6* | 1.7 | 2.9 | 2.7 | 3.3* | 7.8 |
| | 0 | - | - | - | - | 4.7* | 4.7* | 4.7* | 4.7* | 3.5 | 6.5 | 5.9 | 8.2* | 2.4 | 4.2 | 3.8 | 6* | 1.7 | 3.1 | 2.8 | 4.3* | 1.7 | 3 | 2.8 | 3.6* | 7.6 |
| | -1.5 | - | - | - | - | 6.3 | 9.1* | 9.1* | 9.1* | 3.4 | 6.4 | 5.8 | 8.2* | 2.3 | 4.2 | 3.8 | 6* | - | - | - | - | 1.9 | 3.4 | 3.1 | 4.3* | 7 |
| | -3 | - | - | - | - | - | - | - | - | 3.5 | 6.5 | 5.9 | 7.3* | - | - | - | - | - | - | - | - | 2.4 | 4.3 | 4 | 5.2* | 5.9 |
| | -4.5 | - | - | - | - | - | - | - | - | - | - | - | - | - | - | - | - | - | - | - | - | - | - | - | - | - |

Notes: 1. Working pressure with Power Boost = 37.5 MPa. 2. The above values are in compliance with ISO standard 10 567. They do not exceed 87 % of hydraulic lifting capacity or 75 % of tipping load, with the machine on firm, level ground. 3. Load capacities marked with an asterisk (*) are limited by machine's hydraulic lifting capacity rather than tipping load.

# Specifications

**LIFTING CAPACITY EW160E with heavy counterweight**

At the arm end, without bucket and quick fit. For lifting capacity including bucket/quick fit, simply subtract actual weight of those parts from the following values. With heavy couterweight. **Unit: 1 000kg**

| | Lifting point | Reach from machine centre (u = support up/d = support down) | | | | | | | | | | | | | | | | | | | | | | | | |
|---|---|---|---|---|---|---|---|---|---|---|---|---|---|---|---|---|---|---|---|---|---|---|---|---|---|---|
| | | 1.5 m | | | | 3.0 m | | | | 4.5 m | | | | 6.0 m | | | | 7.5 m | | | | Max. | | | | |
| | | Across UC | | Along UC | | Across UC | | Along UC | | Across UC | | Along UC | | Across UC | | Along UC | | Across UC | | Along UC | | Across UC | | Along UC | | Max. |
| | m | u | d | u | d | u | d | u | d | u | d | u | d | u | d | u | d | u | d | u | d | u | d | u | d | m |
| 2-piece Boom: 5.1m<br>Dipper Arm: 3.1m<br>Front dozer blade<br>Rear outriggers | 7.5 | - | - | - | - | - | - | - | - | - | - | - | - | - | - | - | - | - | - | - | - | 2.9 | 2.9* | 2.9* | 2.9* | 5.9 |
| | 6 | - | - | - | - | - | - | - | - | - | - | - | - | 2.9 | 3.7* | 3.7* | 3.7* | - | - | - | - | 2.1 | 2.6* | 2.6* | 2.6* | 7.1 |
| | 4.5 | - | - | - | - | - | - | - | - | 4.2* | 4.2* | 4.2* | 4.2* | 2.8 | 4* | 4* | 4* | 1.9 | 3.1 | 3 | 3.5* | 1.7 | 2.5* | 2.5* | 2.5* | 7.8 |
| | 3 | - | - | - | - | - | - | - | - | 4.1 | 5.6* | 5.6* | 5.6* | 2.6 | 4.3 | 4.2 | 4.6* | 1.8 | 3 | 2.9 | 4.1* | 1.6 | 2.5* | 2.5* | 2.5* | 8.2 |
| | 1.5 | - | - | - | - | - | - | - | - | 3.7 | 6.4 | 6.1 | 7* | 2.5 | 4.1 | 4 | 5.3* | 1.8 | 2.9 | 2.8 | 4.4* | 1.5 | 2.5 | 2.4 | 2.6* | 8.3 |
| | 0 | - | - | - | - | 5.2* | 5.2* | 5.2* | 5.2* | 3.5 | 6.1 | 5.9 | 8* | 2.4 | 4 | 3.8 | 5.8* | 1.7 | 2.9 | 2.8 | 4.6* | 1.5 | 2.6 | 2.5 | 2.9* | 8.1 |
| | -1.5 | - | - | - | - | 6.2 | 8.3* | 8.3* | 8.3* | 3.4 | 6 | 5.8 | 8.2* | 2.3 | 3.9 | 3.8 | 6* | 1.7 | 2.9 | 2.8 | 3.8* | 1.7 | 2.8 | 2.7 | 3.3* | 7.6 |
| | -3 | - | - | - | - | 6.3 | 11.3* | 11.3* | 11.3* | 3.4 | 6.1 | 5.8 | 7.7* | 2.3 | 3.9 | 3.8 | 5.5* | - | - | - | - | 2 | 3.4 | 3.3 | 4.3* | 6.7 |
| | -4.5 | - | - | - | - | - | - | - | - | - | - | - | - | - | - | - | - | - | - | - | - | - | - | - | - | - |
| 2-piece Boom: 5.1m<br>Grab Arm: 2.95m<br>Front dozer blade<br>Rear outriggers | 7.5 | - | - | - | - | - | - | - | - | - | - | - | - | - | - | - | - | - | - | - | - | 3.2 | 3.5* | 3.5* | 3.5* | 5.8 |
| | 6 | - | - | - | - | - | - | - | - | - | - | - | - | 3.1 | 4.1* | 4.1* | 4.1* | - | - | - | - | 2.4 | 3.1* | 3.1* | 3.1* | 7 |
| | 4.5 | - | - | - | - | - | - | - | - | 4.6 | 4.7* | 4.7* | 4.7* | 3 | 4.4* | 4.4* | 4.4* | 2.1 | 3.5 | 3.2 | 3.9* | 2 | 2.9* | 2.9* | 2.9* | 7.7 |
| | 3 | - | - | - | - | - | - | - | - | 4.3 | 6.1* | 6.1* | 6.1* | 2.9 | 4.8 | 4.4 | 5* | 2.1 | 3.4 | 3.2 | 4.5* | 1.8 | 2.9* | 2.8 | 2.9* | 8.1 |
| | 1.5 | - | - | - | - | - | - | - | - | 4 | 7 | 6.4 | 7.5* | 2.7 | 4.6 | 4.2 | 5.7* | 2 | 3.3 | 3.1 | 4.8* | 1.8 | 3 | 2.7 | 3* | 8.2 |
| | 0 | - | - | - | - | - | - | - | - | 3.8 | 6.8 | 6.1 | 8.4* | 2.6 | 4.5 | 4.1 | 6.2* | 2 | 3.3 | 3 | 5* | 1.8 | 3 | 2.8 | 3.2* | 8 |
| | -1.5 | - | - | - | - | 6.5 | 8.2* | 8.2* | 8.2* | 3.7 | 6.7 | 6.1 | 8.5* | 2.6 | 4.4 | 4 | 6.3* | - | - | - | - | 2 | 3.3 | 3 | 3.7* | 7.5 |
| | -3 | - | - | - | - | 6.6 | 11.5* | 11.5* | 11.5* | 3.7 | 6.7 | 6.1 | 7.9* | 2.6 | 4.4 | 4.1 | 5.7* | - | - | - | - | 2.4 | 4 | 3.7 | 4.8* | 6.5 |
| | -4.5 | - | - | - | - | - | - | - | - | - | - | - | - | - | - | - | - | - | - | - | - | - | - | - | - | - |
| 2-piece Boom: 5.1m<br>Dipper Arm: 2m<br>Front and rear<br>outriggers | 7.5 | - | - | - | - | - | - | - | - | - | - | - | - | - | - | - | - | - | - | - | - | 4.7 | 5.2* | 5.3* | 5.2* | 4.3 |
| | 6 | - | - | - | - | - | - | - | - | 4.5 | 4.8* | 4.8* | 4.8* | - | - | - | - | - | - | - | - | 2.9 | 4.4* | 4.4* | 4.4* | 5.8 |
| | 4.5 | - | - | - | - | 7.5* | 7.4* | 7.5* | 7.4* | 4.3 | 5.5* | 5.6* | 5.5* | 2.8 | 4.9* | 4.2 | 4.9* | - | - | - | - | 2.3 | 4.2* | 3.5 | 4.2* | 6.7 |
| | 3 | - | - | - | - | - | - | - | - | 4 | 6.8* | 6.3 | 6.8* | 2.7 | 5.3* | 4.1 | 5.3* | - | - | - | - | 2 | 4.2* | 3.1 | 4.2* | 7.1 |
| | 1.5 | - | - | - | - | - | - | - | - | 3.7 | 8* | 6 | 8* | 2.5 | 5.6 | 4 | 5.9* | - | - | - | - | 1.9 | 4.2 | 3 | 4.4* | 7.2 |
| | 0 | - | - | - | - | - | - | - | - | 3.6 | 8.4* | 5.9 | 8.4* | 2.5 | 5.5 | 3.9 | 6.1* | - | - | - | - | 2 | 4.4 | 3.1 | 5* | 7 |
| | -1.5 | - | - | - | - | 6.6 | 10.4 | 10.4* | 10.4* | 3.6 | 8 | 5.9 | 8* | 2.5 | 5.5 | 3.9 | 5.8* | - | - | - | - | 2.3 | 5.1 | 3.6 | 5.3* | 6.4 |
| | -3 | - | - | - | - | - | - | - | - | - | - | - | - | - | - | - | - | - | - | - | - | - | - | - | - | - |
| | -4.5 | - | - | - | - | - | - | - | - | - | - | - | - | - | - | - | - | - | - | - | - | - | - | - | - | - |
| 2-piece Boom: 5.1m<br>Dipper Arm: 2.45m<br>Front and rear<br>outriggers | 7.5 | - | - | - | - | - | - | - | - | 4.4* | 4.4* | 4.4* | 4.4* | - | - | - | - | - | - | - | - | 3.8 | 4* | 4* | 4* | 5 |
| | 6 | - | - | - | - | - | - | - | - | 4.2* | 4.2* | 4.2* | 4.2* | 2.8 | 4.3* | 4.3 | 4.3* | - | - | - | - | 2.5 | 3.5* | 3.5* | 3.5* | 6.4 |
| | 4.5 | - | - | - | - | - | - | - | - | 4.4 | 5* | 5* | 5* | 2.8 | 4.5* | 4.3 | 4.5* | - | - | - | - | 2.1 | 3.3* | 3.2 | 3.3* | 7.2 |
| | 3 | - | - | - | - | - | - | - | - | 4 | 6.3* | 6.3* | 6.3* | 2.7 | 5* | 4.1 | 5* | 1.9 | 3.8* | 2.9 | 3.8* | 1.8 | 3.3* | 2.9 | 3.3* | 7.6 |
| | 1.5 | - | - | - | - | - | - | - | - | 3.7 | 7.6* | 6 | 7.6* | 2.5 | 5.6 | 3.9 | 5.6* | 1.8 | 4 | 2.8 | 4.7* | 1.8 | 3.5* | 2.8 | 3.5* | 7.7 |
| | 0 | - | - | - | - | - | - | - | - | 3.6 | 8.3* | 5.9 | 8.3* | 2.4 | 5.5 | 3.8 | 6* | - | - | - | - | 1.8 | 3.9* | 2.8 | 3.9* | 7.4 |
| | -1.5 | - | - | - | - | 6.4 | 9.4* | 9.4* | 9.4* | 3.5 | 8.2* | 5.8 | 8.2* | 2.4 | 5.5 | 3.8 | 6* | - | - | - | - | 2 | 4.5 | 3.2 | 4.6* | 6.9 |
| | -3 | - | - | - | - | - | - | - | - | 3.6 | 7.2* | 5.9 | 7.2* | - | - | - | - | - | - | - | - | 2.7 | 5.6* | 4.3 | 5.6* | 5.5 |
| | -4.5 | - | - | - | - | - | - | - | - | - | - | - | - | - | - | - | - | - | - | - | - | - | - | - | - | - |
| 2-piece Boom: 5.1m<br>Dipper Arm: 2.6m<br>Front and rear<br>outriggers | 7.5 | - | - | - | - | - | - | - | - | - | - | - | - | - | - | - | - | - | - | - | - | 3.5 | 3.7* | 3.7* | 3.7* | 5.2 |
| | 6 | - | - | - | - | - | - | - | - | - | - | - | - | 2.9 | 4.1* | 4.1* | 4.1* | - | - | - | - | 2.4 | 3.2* | 3.2* | 3.2* | 6.5 |
| | 4.5 | - | - | - | - | - | - | - | - | 4.4 | 4.8* | 4.8* | 4.8* | 2.8 | 4.4* | 4.3 | 4.4* | - | - | - | - | 2 | 3.1* | 3.1 | 3.1* | 7.3 |
| | 3 | - | - | - | - | - | - | - | - | 4 | 6.2* | 6.2* | 6.2* | 2.7 | 4.9* | 4.1 | 4.9* | 1.9 | 4 | 2.9 | 4.3* | 1.8 | 3.1* | 2.8 | 3.1* | 7.7 |
| | 1.5 | - | - | - | - | - | - | - | - | 3.7 | 7.5* | 6.1 | 7.5* | 2.5 | 5.5* | 3.9 | 5.5* | 1.8 | 4 | 2.8 | 4.6* | 1.7 | 3.3* | 2.7 | 3.3* | 7.8 |
| | 0 | - | - | - | - | 4.7* | 4.7* | 4.7* | 4.7* | 3.5 | 8.2* | 5.8 | 8.2* | 2.4 | 5.5 | 3.8 | 6* | 1.8 | 3.9 | 2.8 | 4.3* | 1.7 | 3.6* | 2.7 | 3.6* | 7.6 |
| | -1.5 | - | - | - | - | 6.3 | 9.1* | 9.1* | 9.1* | 3.5 | 8.2* | 5.8 | 8.2* | 2.4 | 5.4 | 3.8 | 6* | - | - | - | - | 1.9 | 4.3* | 3.1 | 4.3* | 7 |
| | -3 | - | - | - | - | - | - | - | - | 3.6 | 7.3* | 5.9 | 7.3* | - | - | - | - | - | - | - | - | 2.5 | 5.2* | 3.9 | 5.2* | 5.9 |
| | -4.5 | - | - | - | - | - | - | - | - | - | - | - | - | - | - | - | - | - | - | - | - | - | - | - | - | - |
| 2-piece Boom: 5.1m<br>Dipper Arm: 3.1m<br>Front and rear<br>outriggers | 7.5 | - | - | - | - | - | - | - | - | - | - | - | - | - | - | - | - | - | - | - | - | 2.9 | 2.9* | 2.9* | 2.9* | 5.9 |
| | 6 | - | - | - | - | - | - | - | - | - | - | - | - | 2.9 | 3.7* | 3.7* | 3.7* | - | - | - | - | 2.1 | 2.6* | 2.6* | 2.6* | 7.1 |
| | 4.5 | - | - | - | - | - | - | - | - | 4.2* | 4.2* | 4.2* | 4.2* | 2.8 | 4* | 4* | 4* | 1.9 | 3.5* | 3 | 3.5* | 1.8 | 2.5* | 2.5* | 2.5* | 7.8 |
| | 3 | - | - | - | - | - | - | - | - | 4.1 | 5.6* | 5.6* | 5.6* | 2.7 | 4.6* | 4.1 | 4.6* | 1.9 | 4.1 | 2.9 | 4.1* | 1.6 | 2.5* | 2.5* | 2.5* | 8.2 |
| | 1.5 | - | - | - | - | - | - | - | - | 3.8 | 7* | 6.1 | 7* | 2.5 | 5.3* | 4 | 5.3* | 1.8 | 4 | 2.8 | 4.4* | 1.5 | 2.6* | 2.4 | 2.6* | 8.3 |
| | 0 | - | - | - | - | 5.2* | 5.2* | 5.2* | 5.2* | 3.5 | 8* | 5.8 | 8* | 2.4 | 5.5 | 3.8 | 5.8* | 1.7 | 3.9 | 2.8 | 4.6* | 1.6 | 2.9* | 2.5 | 2.9* | 8.1 |
| | -1.5 | - | - | - | - | 6.3 | 8.3* | 8.3* | 8.3* | 3.4 | 8.2* | 5.7 | 8.2* | 2.3 | 5.4 | 3.7 | 6* | 1.7 | 3.8* | 2.7 | 3.8* | 1.7 | 3.3* | 2.7 | 3.3* | 7.6 |
| | -3 | - | - | - | - | 6.4 | 11.3* | 11.3* | 11.3* | 3.5 | 7.7* | 5.8 | 7.7* | 2.3 | 5.4 | 3.8 | 5.5* | - | - | - | - | 2.1 | 4.3* | 3.3 | 4.3* | 6.7 |
| | -4.5 | - | - | - | - | - | - | - | - | - | - | - | - | - | - | - | - | - | - | - | - | - | - | - | - | - |

Notes: 1. Working pressure with Power Boost = 37.5 MPa. 2. The above values are in compliance with ISO standard 10 567. They do not exceed 87 % of hydraulic lifting capacity or 75 % of tipping load, with the machine on firm, level ground. 3. Load capacities marked with an asterisk (*) are limited by machine's hydraulic lifting capacity rather than tipping load.



**LIFTING CAPACITY EW160E with heavy counterweight**

At the arm end, without bucket and quick fit. For lifting capacity including bucket/quick fit, simply subtract actual weight of those parts from the following values. With heavy couterweight. **Unit: 1 000kg**

| | Lifting point | Reach from machine centre (u = support up/d = support down) | | | | | | | | | | | | | | | | | | | | | | | | |
|---|---|---|---|---|---|---|---|---|---|---|---|---|---|---|---|---|---|---|---|---|---|---|---|---|---|---|
| | | 1.5 m | | | | 3.0 m | | | | 4.5 m | | | | 6.0 m | | | | 7.5 m | | | | Max. | | | | |
| | | Across UC | | Along UC | | Across UC | | Along UC | | Across UC | | Along UC | | Across UC | | Along UC | | Across UC | | Along UC | | Across UC | | Along UC | | Max. |
| | m | u | d | u | d | u | d | u | d | u | d | u | d | u | d | u | d | u | d | u | d | u | d | u | d | m |
| 2-piece Boom: 5.1m<br>Grab Arm: 2.95m<br>Front and rear<br>outriggers | 7.5 | - | - | - | - | - | - | - | - | - | - | - | - | - | - | - | - | - | - | - | - | 3.2 | 3.5* | 3.5* | 3.5* | 5.8 |
| | 6 | - | - | - | - | - | - | - | - | - | - | - | - | 3.1 | 4.1* | 4.1* | 4.1* | - | - | - | - | 2.4 | 3.1* | 3.1* | 3.1* | 7 |
| | 4.5 | - | - | - | - | - | - | - | - | 4.7 | 4.7* | 4.7* | 4.7* | 3.1 | 4.4* | 4.4* | 4.4* | 2.2 | 3.9* | 3.2 | 3.9* | 2 | 2.9* | 2.9* | 2.9* | 7.7 |
| | 3 | - | - | - | - | - | - | - | - | 4.4 | 6.1* | 6.1* | 6.1* | 2.9 | 5* | 4.4 | 5* | 2.1 | 4.3 | 3.1 | 4.5* | 1.9 | 2.9* | 2.8 | 2.9* | 8.1 |
| | 1.5 | - | - | - | - | - | - | - | - | 4 | 7.5* | 6.4 | 7.5* | 2.8 | 5.7* | 4.2 | 5.7* | 2 | 4.2 | 3.1 | 4.8* | 1.8 | 3* | 2.7 | 3* | 8.2 |
| | 0 | - | - | - | - | - | - | - | - | 3.8 | 8.4* | 6.1 | 8.4* | 2.6 | 5.7 | 4.1 | 6.2* | 2 | 4.2 | 3 | 5* | 1.8 | 3.2* | 2.8 | 3.2* | 8 |
| | -1.5 | - | - | - | - | 6.6 | 8.2* | 8.2* | 8.2* | 3.7 | 8.5* | 6 | 8.5* | 2.6 | 5.7 | 4 | 6.3* | - | - | - | - | 2 | 3.7* | 3 | 3.7* | 7.5 |
| | -3 | - | - | - | - | 6.7 | 11.5* | 11.5* | 11.5* | 3.8 | 7.9* | 6.1 | 7.9* | 2.6 | 5.7 | 4 | 5.7* | - | - | - | - | 2.4 | 4.8* | 3.6 | 4.8* | 6.5 |
| | -4.5 | - | - | - | - | - | - | - | - | - | - | - | - | - | - | - | - | - | - | - | - | - | - | - | - | - |
| 2-piece Boom: 5.1m<br>Dipper Arm: 2m<br>Rear dozer blade | 7.5 | - | - | - | - | - | - | - | - | - | - | - | - | - | - | - | - | - | - | - | - | 4.5 | 5 | 5.3* | 5.2* | 4.3 |
| | 6 | - | - | - | - | - | - | - | - | 4.2 | 4.8 | 4.8* | 4.8* | - | - | - | - | - | - | - | - | 2.7 | 3.1 | 4.4* | 4.4* | 5.8 |
| | 4.5 | - | - | - | - | 7.5* | 7.4* | 7.5* | 7.4* | 4 | 4.6 | 5.6* | 5.5* | 2.6 | 2.9 | 4.2 | 4.9* | - | - | - | - | 2.1 | 2.4 | 3.5 | 4.2* | 6.7 |
| | 3 | - | - | - | - | - | - | - | - | 3.7 | 4.2 | 6.3 | 6.8* | 2.5 | 2.8 | 4.1 | 5.3* | - | - | - | - | 1.9 | 2.1 | 3.1 | 4.2* | 7.1 |
| | 1.5 | - | - | - | - | - | - | - | - | 3.5 | 4 | 6 | 8* | 2.3 | 2.7 | 4 | 5.9* | - | - | - | - | 1.8 | 2.1 | 3 | 4.4* | 7.2 |
| | 0 | - | - | - | - | - | - | - | - | 3.3 | 3.8 | 5.9 | 8.4* | 2.3 | 2.6 | 3.9 | 6.1* | - | - | - | - | 1.9 | 2.1 | 3.1 | 5* | 7 |
| | -1.5 | - | - | - | - | 6.1 | 7.2 | 10.4* | 10.4* | 3.3 | 3.8 | 5.9 | 8* | 2.3 | 2.6 | 3.9 | 5.8* | - | - | - | - | 2.1 | 2.4 | 3.6 | 5.3* | 6.4 |
| | -3 | - | - | - | - | - | - | - | - | - | - | - | - | - | - | - | - | - | - | - | - | - | - | - | - | - |
| | -4.5 | - | - | - | - | - | - | - | - | - | - | - | - | - | - | - | - | - | - | - | - | - | - | - | - | - |
| 2-piece Boom: 5.1m<br>Dipper Arm: 2.45m<br>Rear dozer blade | 7.5 | - | - | - | - | - | - | - | - | 4.3 | 4.4* | 4.4* | 4.4* | - | - | - | - | - | - | - | - | 3.5 | 4 | 4* | 4* | 5 |
| | 6 | - | - | - | - | 4.2* | 4.2* | 4.2* | 4.2* | 2.7 | 3 | 4.3 | 4.3* | - | - | - | - | - | - | - | - | 2.4 | 2.7 | 3.5* | 3.5* | 6.4 |
| | 4.5 | - | - | - | - | - | - | - | - | 4.1 | 4.6 | 5* | 5* | 2.6 | 2.9 | 4.3 | 4.5* | - | - | - | - | 1.9 | 2.2 | 3.2 | 3.3* | 7.2 |
| | 3 | - | - | - | - | - | - | - | - | 3.8 | 4.3 | 6.3* | 6.3* | 2.5 | 2.8 | 4.1 | 5* | 1.7 | 2 | 2.9 | 3.8* | 1.7 | 1.9 | 2.9 | 3.3* | 7.6 |
| | 1.5 | - | - | - | - | - | - | - | - | 3.5 | 4 | 6.1 | 7.6* | 2.3 | 2.7 | 3.9 | 5.6* | 1.7 | 1.9 | 2.8 | 4.7* | 1.6 | 1.9 | 2.8 | 3.5* | 7.7 |
| | 0 | - | - | - | - | - | - | - | - | 3.3 | 3.8 | 5.9 | 8.3* | 2.2 | 2.6 | 3.8 | 6* | - | - | - | - | 1.7 | 1.9 | 2.8 | 3.9* | 7.4 |
| | -1.5 | - | - | - | - | 5.9 | 7 | 9.4* | 9.4* | 3.3 | 3.8 | 5.8 | 8.2* | 2.2 | 2.5 | 3.8 | 6* | - | - | - | - | 1.9 | 2.1 | 3.2 | 4.6* | 6.9 |
| | -3 | - | - | - | - | - | - | - | - | 3.3 | 3.8 | 5.9 | 7.2* | - | - | - | - | - | - | - | - | 2.5 | 2.9 | 4.3 | 5.6* | 5.5 |
| | -4.5 | - | - | - | - | - | - | - | - | - | - | - | - | - | - | - | - | - | - | - | - | - | - | - | - | - |
| 2-piece Boom: 5.1m<br>Dipper Arm: 2.6m<br>Rear dozer blade | 7.5 | - | - | - | - | - | - | - | - | - | - | - | - | - | - | - | - | - | - | - | - | 3.3 | 3.7* | 3.7* | 3.7* | 5.2 |
| | 6 | - | - | - | - | - | - | - | - | - | - | - | - | 2.7 | 3 | 4.1* | 4.1* | - | - | - | - | 2.3 | 2.6 | 3.2* | 3.2* | 6.5 |
| | 4.5 | - | - | - | - | - | - | - | - | 4.1 | 4.7 | 4.8* | 4.8* | 2.6 | 2.9 | 4.3 | 4.4* | - | - | - | - | 1.8 | 2.1 | 3.1 | 3.1* | 7.3 |
| | 3 | - | - | - | - | - | - | - | - | 3.8 | 4.3 | 6.2* | 6.2* | 2.5 | 2.8 | 4.1 | 4.9* | 1.7 | 2 | 2.9 | 4.3* | 1.6 | 1.9 | 2.8 | 3.1* | 7.7 |
| | 1.5 | - | - | - | - | - | - | - | - | 3.5 | 4 | 6.1 | 7.5* | 2.3 | 2.7 | 3.9 | 5.5* | 1.7 | 1.9 | 2.8 | 4.6* | 1.6 | 1.8 | 2.7 | 3.3* | 7.8 |
| | 0 | - | - | - | - | 4.7* | 4.7* | 4.7* | 4.7* | 3.3 | 3.8 | 5.8 | 8.2* | 2.2 | 2.5 | 3.8 | 6* | 1.6 | 1.9 | 2.8 | 4.3* | 1.6 | 1.8 | 2.7 | 3.6* | 7.6 |
| | -1.5 | - | - | - | - | 5.9 | 7 | 9.1* | 9.1* | 3.2 | 3.7 | 5.8 | 8.2* | 2.2 | 2.5 | 3.8 | 6* | - | - | - | - | 1.8 | 2 | 3.1 | 4.3* | 7 |
| | -3 | - | - | - | - | - | - | - | - | 3.3 | 3.8 | 5.9 | 7.3* | - | - | - | - | - | - | - | - | 2.3 | 2.6 | 3.9 | 5.2* | 5.9 |
| | -4.5 | - | - | - | - | - | - | - | - | - | - | - | - | - | - | - | - | - | - | - | - | - | - | - | - | - |
| 2-piece Boom: 5.1m<br>Dipper Arm: 3.1m<br>Rear dozer blade | 7.5 | - | - | - | - | - | - | - | - | - | - | - | - | - | - | - | - | - | - | - | - | 2.7 | 2.9* | 2.9* | 2.9* | 5.9 |
| | 6 | - | - | - | - | - | - | - | - | - | - | - | - | 2.7 | 3.1 | 3.7* | 3.7* | - | - | - | - | 2 | 2.2 | 2.6* | 2.6* | 7.1 |
| | 4.5 | - | - | - | - | - | - | - | - | 4.2 | 4.2* | 4.2* | 4.2* | 2.6 | 3 | 4* | 4* | 1.8 | 2 | 3 | 3.5* | 1.6 | 1.9 | 2.5* | 2.5* | 7.8 |
| | 3 | - | - | - | - | - | - | - | - | 3.9 | 4.4 | 5.6* | 5.6* | 2.5 | 2.8 | 4.1 | 4.6* | 1.7 | 2 | 2.9 | 4.1* | 1.5 | 1.7 | 2.5* | 2.5* | 8.2 |
| | 1.5 | - | - | - | - | - | - | - | - | 3.5 | 4 | 6.1 | 7* | 2.3 | 2.7 | 4 | 5.3* | 1.7 | 1.9 | 2.8 | 4.4* | 1.4 | 1.6 | 2.4 | 2.6* | 8.3 |
| | 0 | - | - | - | - | 5.2* | 5.2* | 5.2* | 5.2* | 3.3 | 3.8 | 5.8 | 8* | 2.2 | 2.5 | 3.8 | 5.8* | 1.6 | 1.8 | 2.8 | 4.6* | 1.4 | 1.6 | 2.5 | 2.9* | 8.1 |
| | -1.5 | - | - | - | - | 5.8 | 6.9 | 8.3* | 8.3* | 3.2 | 3.7 | 5.7 | 8.2* | 2.1 | 2.5 | 3.7 | 6* | 1.6 | 1.8 | 2.7 | 3.8* | 1.6 | 1.8 | 2.7 | 3.3* | 7.6 |
| | -3 | - | - | - | - | 5.9 | 7 | 11.3* | 11.3* | 3.2 | 3.7 | 5.8 | 7.7* | 2.2 | 2.5 | 3.8 | 5.5* | - | - | - | - | 1.9 | 2.2 | 3.3 | 4.3* | 6.7 |
| | -4.5 | - | - | - | - | - | - | - | - | - | - | - | - | - | - | - | - | - | - | - | - | - | - | - | - | - |
| 2-piece Boom: 5.1m<br>Grab Arm: 2.95m<br>Rear dozer blade | 7.5 | - | - | - | - | - | - | - | - | - | - | - | - | - | - | - | - | - | - | - | - | 3 | 3.4 | 3.5* | 3.5* | 5.8 |
| | 6 | - | - | - | - | - | - | - | - | - | - | - | - | 2.9 | 3.3 | 4.1* | 4.1* | - | - | - | - | 2.2 | 2.5 | 3.1* | 3.1* | 7 |
| | 4.5 | - | - | - | - | - | - | - | - | 4.4 | 4.7* | 4.7* | 4.7* | 2.9 | 3.2 | 4.4* | 4.4* | 2 | 2.3 | 3.2 | 3.9* | 1.9 | 2.1 | 2.9* | 2.9* | 7.7 |
| | 3 | - | - | - | - | - | - | - | - | 4.1 | 4.6 | 6.1* | 6.1* | 2.7 | 3.1 | 4.4 | 5* | 2 | 2.2 | 3.1 | 4.5* | 1.7 | 2 | 2.8 | 2.9* | 8.1 |
| | 1.5 | - | - | - | - | - | - | - | - | 3.8 | 4.3 | 6.4 | 7.5* | 2.6 | 2.9 | 4.2 | 5.7* | 1.9 | 2.1 | 3.1 | 4.8* | 1.7 | 1.9 | 2.7 | 3* | 8.2 |
| | 0 | - | - | - | - | - | - | - | - | 3.5 | 4.1 | 6.1 | 8.4* | 2.5 | 2.8 | 4.1 | 6.2* | 1.8 | 2.1 | 3 | 5* | 1.7 | 1.9 | 2.8 | 3.2* | 8 |
| | -1.5 | - | - | - | - | 6.1 | 7.2 | 8.2* | 8.2* | 3.5 | 4 | 6 | 8.5* | 2.4 | 2.7 | 4 | 6.3* | - | - | - | - | 1.9 | 2.1 | 3 | 3.7* | 7.5 |
| | -3 | - | - | - | - | 6.3 | 7.3 | 11.5* | 11.5* | 3.5 | 4 | 6.1 | 7.9* | 2.4 | 2.8 | 4 | 5.7* | - | - | - | - | 2.2 | 2.5 | 3.6 | 4.8* | 6.5 |
| | -4.5 | - | - | - | - | - | - | - | - | - | - | - | - | - | - | - | - | - | - | - | - | - | - | - | - | - |

Notes: 1. Working pressure with Power Boost = 37.5 MPa. 2. The above values are in compliance with ISO standard 10 567. They do not exceed 87 % of hydraulic lifting capacity or 75 % of tipping load, with the machine on firm, level ground. 3. Load capacities marked with an asterisk (*) are limited by machine's hydraulic lifting capacity rather than tipping load.

# Specifications

**LIFTING CAPACITY EW160E with heavy counterweight**

At the arm end, without bucket and quick fit. For lifting capacity including bucket/quick fit, simply subtract actual weight of those parts from the following values. With heavy couterweight. **Unit: 1 000kg**

| | Lifting point | Reach from machine centre (u = support up/d = support down) | | | | | | | | | | | | | | | | | | | | | | | | |
|---|---|---|---|---|---|---|---|---|---|---|---|---|---|---|---|---|---|---|---|---|---|---|---|---|---|---|
| | | 1.5 m | | | | 3.0 m | | | | 4.5 m | | | | 6.0 m | | | | 7.5 m | | | | Max. | | | | |
| | | Across UC | | Along UC | | Across UC | | Along UC | | Across UC | | Along UC | | Across UC | | Along UC | | Across UC | | Along UC | | Across UC | | Along UC | | Max. |
| | m | u | d | u | d | u | d | u | d | u | d | u | d | u | d | u | d | u | d | u | d | u | d | u | d | m |
| 2-piece offset<br>Boom: 5.2m<br>Dipper Arm: 2m<br>Front dozer blade<br>Rear outriggers | 7.5 | - | - | - | - | - | - | - | - | - | - | - | - | - | - | - | - | - | - | - | - | 4* | 4* | 4* | 4* | 4.5 |
| | 6 | - | - | - | - | - | - | - | - | 4.5 | 4.6* | 4.6* | 4.6* | - | - | - | - | - | - | - | - | 2.8 | 3.5* | 3.5* | 3.5* | 5.9 |
| | 4.5 | - | - | - | - | 7.4* | 7.3* | 7.4* | 7.3* | 4.2 | 5.3* | 5.4* | 5.3* | 2.7 | 4.6 | 4.2 | 4.6* | - | - | - | - | 2.2 | 3.3* | 3.3* | 3.3* | 6.8 |
| | 3 | - | - | - | - | - | - | - | - | 3.8 | 6.6* | 6.3 | 6.6* | 2.5 | 4.4 | 4.1 | 5.1* | - | - | - | - | 1.9 | 3.3 | 3 | 3.3* | 7.2 |
| | 1.5 | - | - | - | - | - | - | - | - | 3.5 | 6.5 | 5.9 | 7.7* | 2.4 | 4.3 | 3.9 | 5.7* | - | - | - | - | 1.8 | 3.2 | 2.9 | 3.6* | 7.3 |
| | 0 | - | - | - | - | - | - | - | - | 3.4 | 6.4 | 5.7 | 8.1* | 2.3 | 4.2 | 3.8 | 5.9* | - | - | - | - | 1.8 | 3.3 | 3 | 4* | 7.1 |
| | -1.5 | - | - | - | - | 6.1 | 7.4* | 7.4* | 7.4* | 3.4 | 6.4 | 5.7 | 7.9* | 2.3 | 4.2 | 3.8 | 5.7* | - | - | - | - | 2.1 | 3.8 | 3.4 | 5* | 6.5 |
| | -3 | - | - | - | - | - | - | - | - | - | - | - | - | - | - | - | - | - | - | - | - | - | - | - | - | - |
| | -4.5 | - | - | - | - | - | - | - | - | - | - | - | - | - | - | - | - | - | - | - | - | - | - | - | - | - |
| 2-piece offset<br>Boom: 5.2m<br>Dipper Arm: 2.45m<br>Front dozer blade<br>Rear outriggers | 7.5 | - | - | - | - | - | - | - | - | - | - | - | - | - | - | - | - | - | - | - | - | 3.1* | 3.1* | 3.1* | 3.1* | 5.1 |
| | 6 | - | - | - | - | - | - | - | - | - | - | - | - | 2.8 | 3.9* | 3.9* | 3.9* | - | - | - | - | 2.4 | 2.7* | 2.7* | 2.7* | 6.5 |
| | 4.5 | - | - | - | - | - | - | - | - | 4.3 | 4.8* | 4.8* | 4.8* | 2.7 | 4.3* | 4.3 | 4.3* | - | - | - | - | 1.9 | 2.6* | 2.6* | 2.6* | 7.2 |
| | 3 | - | - | - | - | - | - | - | - | 3.9 | 6.1* | 6.1* | 6.1* | 2.6 | 4.5 | 4.1 | 4.8* | 1.8 | 3.1 | 2.9 | 3.4* | 1.7 | 2.6* | 2.6* | 2.6* | 7.6 |
| | 1.5 | - | - | - | - | - | - | - | - | 3.5 | 6.6 | 5.9 | 7.4* | 2.4 | 4.3 | 3.9 | 5.4* | 1.7 | 3.1 | 2.8 | 4.2* | 1.6 | 2.8* | 2.7 | 2.8* | 7.7 |
| | 0 | - | - | - | - | - | - | - | - | 3.3 | 6.3 | 5.7 | 8* | 2.3 | 4.1 | 3.8 | 5.8* | 1.7 | 3 | 2.7 | 3.2* | 1.7 | 3 | 2.7 | 3.1* | 7.5 |
| | -1.5 | - | - | - | - | 6 | 6.8* | 6.8* | 6.8* | 3.3 | 6.3 | 5.7 | 8* | 2.2 | 4.1 | 3.7 | 5.8* | - | - | - | - | 1.8 | 3.3 | 3 | 3.8* | 7 |
| | -3 | - | - | - | - | - | - | - | - | 3.4 | 6.4 | 5.8 | 7.1* | - | - | - | - | - | - | - | - | 2.3 | 4.3 | 3.9 | 5* | 5.9 |
| | -4.5 | - | - | - | - | - | - | - | - | - | - | - | - | - | - | - | - | - | - | - | - | - | - | - | - | - |
| 2-piece offset<br>Boom: 5.2m<br>Dipper Arm: 2.6m<br>Front dozer blade<br>Rear outriggers | 7.5 | - | - | - | - | - | - | - | - | - | - | - | - | - | - | - | - | - | - | - | - | 2.9* | 2.9* | 2.9* | 2.9* | 5.3 |
| | 6 | - | - | - | - | - | - | - | - | - | - | - | - | 2.8 | 3.8* | 3.8* | 3.8* | - | - | - | - | 2.3 | 2.5* | 2.5* | 2.5* | 6.6 |
| | 4.5 | - | - | - | - | - | - | - | - | 4.3 | 4.7* | 4.7* | 4.7* | 2.7 | 4.2* | 4.2* | 4.2* | - | - | - | - | 1.9 | 2.4* | 2.4* | 2.4* | 7.4 |
| | 3 | - | - | - | - | - | - | - | - | 3.9 | 6* | 6* | 6* | 2.6 | 4.5 | 4.1 | 4.7* | 1.8 | 3.1 | 2.9 | 3.6* | 1.7 | 2.4* | 2.4* | 2.4* | 7.8 |
| | 1.5 | - | - | - | - | - | - | - | - | 3.5 | 6.6 | 6 | 7.3* | 2.4 | 4.3 | 3.9 | 5.4* | 1.7 | 3.1 | 2.8 | 4.3* | 1.6 | 2.6* | 2.6 | 2.6* | 7.9 |
| | 0 | - | - | - | - | - | - | - | - | 3.3 | 6.3 | 5.7 | 8* | 2.3 | 4.1 | 3.8 | 5.8* | 1.7 | 3 | 2.7 | 4* | 1.6 | 2.9* | 2.7 | 2.9* | 7.7 |
| | -1.5 | - | - | - | - | 5.9 | 6.6* | 6.6* | 6.6* | 3.3 | 6.3 | 5.7 | 8* | 2.2 | 4.1 | 3.7 | 5.8* | - | - | - | - | 1.8 | 3.2 | 2.9 | 3.5* | 7.1 |
| | -3 | - | - | - | - | - | - | - | - | 3.3 | 6.3 | 5.7 | 7.2* | 2.3 | 4.2 | 3.8 | 5.1* | - | - | - | - | 2.2 | 4 | 3.7 | 4.7* | 6.2 |
| | -4.5 | - | - | - | - | - | - | - | - | - | - | - | - | - | - | - | - | - | - | - | - | - | - | - | - | - |

Notes: 1. Working pressure with Power Boost = 37.5 MPa. 2. The above values are in compliance with ISO standard 10 567. They do not exceed 87 % of hydraulic lifting capacity or 75 % of tipping load, with the machine on firm, level ground. 3. Load capacities marked with an asterisk (*) are limited by machine's hydraulic lifting capacity rather than tipping load.



**LIFTING CAPACITY EW160E with heavy counterweight**

At the arm end, without bucket and quick fit. For lifting capacity including bucket/quick fit, simply subtract actual weight of those parts from the following values. With heavy couterweight. **Unit: 1 000kg**

| | Lifting point | Reach from machine centre (u = support up/d = support down) | | | | | | | | | | | | | | | | | | | | | | | | |
|---|---|---|---|---|---|---|---|---|---|---|---|---|---|---|---|---|---|---|---|---|---|---|---|---|---|---|
| | | 1.5 m | | | | 3.0 m | | | | 4.5 m | | | | 6.0 m | | | | 7.5 m | | | | Max. | | | | |
| | | Across UC | | Along UC | | Across UC | | Along UC | | Across UC | | Along UC | | Across UC | | Along UC | | Across UC | | Along UC | | Across UC | | Along UC | | Max. |
| | m | u | d | u | d | u | d | u | d | u | d | u | d | u | d | u | d | u | d | u | d | u | d | u | d | m |
| 2-piece offset<br>Boom: 5.2m<br>Dipper Arm: 2m<br>Rear dozer blade | 7.5 | - | - | - | - | - | - | - | - | - | - | - | - | - | - | - | - | - | - | - | - | 4* | 4* | 4* | 4* | 4.5 |
| | 6 | - | - | - | - | - | - | - | - | 4.3 | 4.6* | 4.6* | 4.6* | - | - | - | - | - | - | - | - | 2.6 | 3 | 3.5* | 3.5* | 5.9 |
| | 4.5 | - | - | - | - | 7.4* | 7.3* | 7.4* | 7.3* | 4 | 4.5 | 5.4* | 5.3* | 2.5 | 2.9 | 4.2 | 4.6* | - | - | - | - | 2 | 2.3 | 3.3* | 3.3* | 6.8 |
| | 3 | - | - | - | - | - | - | - | - | 3.6 | 4.1 | 6.3 | 6.6* | 2.4 | 2.7 | 4 | 5.1* | - | - | - | - | 1.8 | 2 | 3 | 3.3* | 7.2 |
| | 1.5 | - | - | - | - | - | - | - | - | 3.3 | 3.8 | 5.9 | 7.7* | 2.2 | 2.6 | 3.9 | 5.7* | - | - | - | - | 1.7 | 1.9 | 2.9 | 3.6* | 7.3 |
| | 0 | - | - | - | - | - | - | - | - | 3.1 | 3.7 | 5.7 | 8.1* | 2.1 | 2.5 | 3.8 | 5.9* | - | - | - | - | 1.7 | 2 | 3 | 4* | 7.1 |
| | -1.5 | - | - | - | - | 5.8 | 6.8 | 7.4* | 7.4* | 3.1 | 3.6 | 5.7 | 7.9* | 2.1 | 2.5 | 3.8 | 5.7* | - | - | - | - | 1.9 | 2.2 | 3.4 | 5* | 6.5 |
| | -4.5 | - | - | - | - | - | - | - | - | - | - | - | - | - | - | - | - | - | - | - | - | - | - | - | - | - |
| 2-piece offset<br>Boom: 5.2m<br>Dipper Arm: 2.45m<br>Rear dozer blade | 7.5 | - | - | - | - | - | - | - | - | - | - | - | - | - | - | - | - | - | - | - | - | 3.1* | 3.1* | 3.1* | 3.1* | 5.1 |
| | 6 | - | - | - | - | - | - | - | - | - | - | - | - | 2.7 | 3 | 3.9* | 3.9* | - | - | - | - | 2.3 | 2.6 | 2.7* | 2.7* | 6.5 |
| | 4.5 | - | - | - | - | - | - | - | - | 4.1 | 4.6 | 4.8* | 4.8* | 2.6 | 2.9 | 4.3 | 4.3* | - | - | - | - | 1.8 | 2.1 | 2.6* | 2.6* | 7.2 |
| | 3 | - | - | - | - | - | - | - | - | 3.7 | 4.2 | 6.1* | 6.1* | 2.4 | 2.7 | 4.1 | 4.8* | 1.7 | 1.9 | 2.8 | 3.4* | 1.6 | 1.8 | 2.6* | 2.6* | 7.6 |
| | 1.5 | - | - | - | - | - | - | - | - | 3.3 | 3.8 | 5.9 | 7.4* | 2.2 | 2.6 | 3.9 | 5.4* | 1.6 | 1.8 | 2.8 | 4.2* | 1.5 | 1.8 | 2.6 | 2.8* | 7.7 |
| | 0 | - | - | - | - | - | - | - | - | 3.1 | 3.6 | 5.7 | 8* | 2.1 | 2.4 | 3.7 | 5.8* | 1.5 | 1.8 | 2.7 | 3.2* | 1.5 | 1.8 | 2.7 | 3.1* | 7.5 |
| | -1.5 | - | - | - | - | 5.6 | 6.7 | 6.8* | 6.8* | 3.1 | 3.6 | 5.6 | 8* | 2.1 | 2.4 | 3.7 | 5.8* | - | - | - | - | 1.7 | 2 | 3 | 3.8* | 7 |
| | -3 | - | - | - | - | - | - | - | - | 3.1 | 3.7 | 5.7 | 7.1* | - | - | - | - | - | - | - | - | 2.2 | 2.5 | 3.9 | 5* | 5.9 |
| | -4.5 | - | - | - | - | - | - | - | - | - | - | - | - | - | - | - | - | - | - | - | - | - | - | - | - | - |
| 2-piece offset<br>Boom: 5.2m<br>Dipper Arm: 2.6m<br>Rear dozer blade | 7.5 | - | - | - | - | - | - | - | - | - | - | - | - | - | - | - | - | - | - | - | - | 2.9* | 2.9* | 2.9* | 2.9* | 5.3 |
| | 6 | - | - | - | - | - | - | - | - | - | - | - | - | 2.7 | 3 | 3.8* | 3.8* | - | - | - | - | 2.2 | 2.5 | 2.5* | 2.5* | 6.6 |
| | 4.5 | - | - | - | - | - | - | - | - | 4.1 | 4.7* | 4.7* | 4.7* | 2.6 | 2.9 | 4.2* | 4.2* | - | - | - | - | 1.8 | 2 | 2.4* | 2.4* | 7.4 |
| | 3 | - | - | - | - | - | - | - | - | 3.7 | 4.2 | 6* | 6* | 2.4 | 2.8 | 4.1 | 4.7* | 1.7 | 1.9 | 2.9 | 3.6* | 1.6 | 1.8 | 2.4* | 2.4* | 7.8 |
| | 1.5 | - | - | - | - | - | - | - | - | 3.3 | 3.8 | 5.9 | 7.3* | 2.2 | 2.6 | 3.9 | 5.4* | 1.6 | 1.8 | 2.8 | 4.4* | 1.5 | 1.7 | 2.6 | 2.6* | 7.9 |
| | 0 | - | - | - | - | - | - | - | - | 3.1 | 3.6 | 5.7 | 8* | 2.1 | 2.4 | 3.7 | 5.8* | 1.5 | 1.8 | 2.7 | 4* | 1.5 | 1.7 | 2.6 | 2.9* | 7.7 |
| | -1.5 | - | - | - | - | 5.6 | 6.6* | 6.6* | 6.6* | 3 | 3.6 | 5.6 | 8* | 2.1 | 2.4 | 3.7 | 5.8* | - | - | - | - | 1.7 | 1.9 | 2.9 | 3.5* | 7.1 |
| | -3 | - | - | - | - | - | - | - | - | 3.1 | 3.6 | 5.7 | 7.2* | 2.1 | 2.5 | 3.8 | 5.1* | - | - | - | - | 2.1 | 2.4 | 3.6 | 4.7* | 6.2 |
| | -4.5 | - | - | - | - | - | - | - | - | - | - | - | - | - | - | - | - | - | - | - | - | - | - | - | - | - |

Notes: 1. Working pressure with Power Boost = 37.5 MPa. 2. The above values are in compliance with ISO standard 10 567. They do not exceed 87 % of hydraulic lifting capacity or 75 % of tipping load, with the machine on firm, level ground. 3. Load capacities marked with an asterisk (*) are limited by machine's hydraulic lifting capacity rather than tipping load.

# Equipment

## STANDARD EQUIPMENT

**Engine**

- Turbocharged, 4 stroke Volvo diesel engine with water cooling, direct injection and charged air cooler that meets EU Stage IV emission requirements
- Intake air pre-heater
- ECO- Modus
- Fuel filter and water separator
- Fuel filler pump: 50 l/min with automatic shut-off
- Aluminium core radiator

**Electric / Electronic control system**

- Contronics-computerized monitoring and diagnostic system
- Master electrical disconnect switch
- Adjustable automatic idling system
- One-touch power boost
- Adjustable monitor
- Safety stop/start function
- 2 Frame mounted halogen lamps
- Alternator,120 A
- Batteries, 2 x 12 V/140 Ah
- Start motor, 24 V/5.5 kW
- CareTrack via GSM or satelite
- Rear view camera

**Superstructure**

- LED Rear lights
- Service walkway with anti-slip grating
- Centralised lubricating point for slew bearing and boom

**Undercarriage**

- 3 speeds ( creep / offroad / road speed up to 35 km/h
- Oscillating front axle ± 9° with out mudguards/ 6° with mudguards
- 2-circuit travel brakes
- Maintenance-free propeller shafts

**Hydraulic system**

- Load sensing hydraulic system
- Cylinder cushioning
- Cylinder contamination seals
- Return filter of full flow type 2 000 h exchange interval
- Pressure relief system (servo accumulator)
- Proportional controlled visco-clutch cooling fan
- Hose rupture valve for boom and arm
- Hydraulic long life oil ISO VG 46

**Cab and interior**

- Cup holder
- Door locks
- Safety glass, light tinted
- Floor mat
- Horn
- Large storage area
- Pull-up type front window
- Removable lower windshield
- Retractable seat belt
- Windshield wiper with washer and intermittent feature
- Sun shield,front, roof & rear
- Bluetooth radio with USB port
- Master ignition key
- Multi function switch on LH Joystick

**Digging Equipment**

- Attachment points for extra hydraulics
- Centralised lubrication point for arm and bucket

## OPTIONAL EQUIPMENT

**Engine**

- Diesel coolant heater with digital timer
- Block heater, 240 V
- Water separator with heater
- Dust net
- Reversable fan
- Air inlet turbo precleaning system
- Micro- mesh and sealing for engine compartment
- Tropical cooling
- Waste package

**Electric / Electronic control system**

- Travel alarm
- Rotating beacon
- Service walkway 1 and counterweight 1
- Boom-mounted 2
- Cab front 2
- Extra LED lights on arm and Cab (4)
- Multi-channel electric centre passage
- Anti-theft system
- Tilting and rotating attachment preparation

**Superstructure**

- Heavy counter weight
- License plate preparation

**Undercarriage**

- Twin tires 10.00 – 20 / 11.00 – 20
- Single tires 18R – 19.5 / 620/40-22.5
- Stone protection rings
- Solid rubber tires 10.00-20/11.00-20
- Front dozer blade and rear outriggers
- Rear dozer blade
- Front outriggers and rear dozer blade
- 4 outriggers
- Grab holder
- Mudguards, front/rear
- Tool box, left hand side/right hand side
- Cruise control
- Travel speed 20 km/h, 30 km/h, 35 km/h
- Wide axle 2.75 m
- Trailer Towing system
- Automatic digging brake
- Drawer type Toolbox

**Hydraulic system**

- Boom float function
- Hydraulic oil, biodegradable ISO VG 32
- Hydraulic oil, biodegradable ISO VG 46
- Hydraulic long life oil ISO VG 32
- Hydraulic long life oil ISO VG 68
- Hammer & shears
- Slope bucket/rotator
- Grab/clam shell
- Quick fit
- Flow control
- flow & pressure control
- Boom suspenssion system

## OPTIONAL EQUIPMENT

**Cab and interior**

- Volvo Care Cab with openable PC roof hatch / ROPS
- Tiltrotator Joystick
- Proportional control joystick
- On/off joystick
- Falling object guard (FOG)
- Cab mounted falling object protective structures (FOPS)
- Rain shield, front
- Side camera
- Steelwrist tiltrotator preparation
- Volvo Smart View system
- Sunlight protection, roof hatch (steel)
- Safety net for front window
- Lower wiper
- Anti-vandalism kit
- Ashtray
- Lighter
- Mechanical Fabric seat, with/or without heater
- Airsuspension seat with heater and X isolator
- Luxury operator seat with aico and wide armrest
- Fixed cab risers
- Hydraulic elevated cab

**Digging Equipment**

- 5.0 m mono boom
- 5.1 m 2-piece boom
- 4.75 m mono offset boom
- 5.2 m 2-piece offset boom
- 2.0 m, 2.45 m, 2.6 m, 3.1 m
- 2.95 m grab arm

## OPTIONAL EQUIPMENT

**Hydraulic quick fit**

- S1 system
- S60 system
- Universal system

**Service**

- Tool kit, daily maintenance
- Automatic Greasing System
- Wheel chocks

**Attachments**

- General Purpose bucket (GP)
- Heavy Duty bucket
- Lifting eye
- Tilt rotator Steelwrist

## SELECTION OF VOLVO OPTIONAL EQUIPMENT

**Luxury seat**

**Boom float**

**LED working lights**

**Tilt rotator joysticks monitor**

**Heavy counterweight**

Not all products are available in all markets. Under our policy of continuous improvement, we reserve the right to change specifications and design without prior notice.
The illustrations do not necessarily show the standard version of the machine.