Volvo Construction Equipment
Building Tomorrow

ECR58

Volvo Compact Excavators, ECR58F 5.8 t 48 hp

WELCOME TO OUR WORLD

Welcome to a world of industry leading machinery. A world where imagination, hard work and technological innovation will lead the way towards developing a future which is cleaner, smarter, and more connected. A world supported by the enduring values of the Volvo Group. A world of stability, sustainability and innovation. A world which we put our customers at the heart of.

Welcome to the world of Volvo Construction Equipment – we think you're going to like it here.

Small machines, big results

With decades of experience in the design and manufacture of compact excavators and wheel loaders, our range of compact machinery is designed with customer success in mind. Built from the same DNA as large Volvo machinery, our compact range sets the standard for efficiency performance and uptime – complemented by an extensive range of Volvo attachments for maximum versatility.

Building on our proud history, the Volvo Concept Lab continues to create cutting-edge ideas and innovative concepts – such as our award-winning electric compact excavator – to ensure we offer our customers machines which deliver big results long into the future.

Solutions for you

Our industry leading machines are just the start of your relationship with Volvo. As your partner, we have developed an extensive range of additional solutions to help you improve uptime, boost productivity and reduce costs.

Designed for your business

Structured across nine blocks, our portfolio of products and services are designed to complement your machine's performance and boost your profitability. Simply put, we offer some of the best guarantees, warranties and technological solutions in the industry today..

There when you need us

Whether you're buying new or used, our global network of dealers and technicians offer around-the-clock support, including machine monitoring and world-class parts availability. It's the basis of everything offered by Volvo Services, so you can be confident we've got you covered right from the start.

BUILDING TOMORROW

The operator’s choice

The new 6-tonne F-generation ECR58 has been expertly designed with the operator in mind. With unrivalled comfort, operators can work more efficiently and with less fatigue. The compact excavator is complemented by a range of Volvo services to support you throughout the lifetime of the machine, including machine monitoring, uptime services and dealer support.

Precision controls

Whether for fast bulk digging or precise levelling, the ECR58’s new hydraulic system provides superb combined operations. Operate hydraulic attachments with precision thanks to the proportional fingertip controls. The automotive style jogwheel and 5” color display enable intuitive navigation through the menus for further fine tuning, allowing the ECR58 to be adapted to any job requirement.

Profit boosting technology

A number of intelligent features combine to deliver outstanding fuel efficiency, including the advanced hydraulic system with load sensing and flow sharing. ECO mode further reduces fuel consumption by up to 10% and auto idle eliminates unnecessary fuel consumption. With auto engine shutdown, hours which are not worked are not recorded, reducing maintenance costs while contributing to a higher resale value.

Machine monitoring made easy

With CareTrack, the Volvo telematics system, you can remotely monitor the status of your machine, including engine, fuel efficiency, important safety information and machine health. Spread service costs and keep your machine in top condition with a repair and maintenance agreement.

Here to support you

Volvo is here to support you with a range of services including financial services and readily available Genuine Volvo Parts – the best choice for your Volvo machine. Speak to your local dealer to find out more about the range of services they can offer to help your business succeed.

THE INDUSTRY’S BEST CAB

Step inside the most spacious cab in the industry. Designed to offer the highest levels of operator convenience, the Volvo cab features efficient soundproofing, updated ergonomic controls, numerous storage areas and 12V and USB ports. The multi-adjustable seat and console, both mounted on the same suspension, provide excellent shock and vibration absorption. A fully opening front window and slide side window further add to comfort and visibility.

TOP OF THE CLASS

Superior stability, breakout force, tear out force and lifting capacity make the F-generation ECR58 a top performer in its class. Experience fast cycle times, even when taking on tough applications and heavy loads. High system pressure delivers impressive tractive force when climbing gradients or traveling over rough terrain.

Multi-tasking made easy

Unlock the full potential of your short swing radius excavator and take on a variety of applications with Volvo's comprehensive range of matched attachments. Increase your versatility and experience new levels of productivity across a wide range of tasks.

Take on more

Quickly switch between attachments and take on a variety of tasks in the F-generation ECR58, thanks to preset adjustments in the new 5" display. Hydraulic flow settings are easily customizable, ensuring optimum performance for the attachment you are working with.

Tiltrotator

Steelwrist® Tiltrotators combine flexibility and precision with a compact size and low weight. For total convenience, settings are easily adjusted from the display and the tiltrotator is controlled from the machine joysticks with three rollers. Fully supported by Volvo parts and warranty, the tiltrotator control system is delivered from Volvo factories.

Tilt Quick Coupler

The ultimate in coupling flexibility with a tilting angle of up to 2 x 90°. The Tilt Quick Coupler connects to dedicated auxiliary lines and enables quick and easy switching between attachments. The compact design of the quick coupler, including minimal height and length, helps to achieve an outstanding digging performance.

Range of Quick Couplers

Unlock the productivity of your compact excavator with our quick couplers, allowing you to safely and quickly connect to a range of Volvo attachments. Choose from a manual or a hydraulic version of the Volvo Universal Quick Coupler, SW-type or Symmetrical type.

Comfort and performance

THE INDUSTRY'S BEST CAB

- Most spacious cab in the industry **NEW**
- Seat and consoles suspended together **A VOLVO EXCLUSIVE**
- Large travel pedals, storage boxes, 12V and USB ports **NEW**
- Best-in-class all-around visibility
- Quiet in-cab environment

Take on more

- Compact design: easy to transport and access tight spaces
- Factory-installed auxiliary hydraulics
- Customizable hydraulic flow settings
- Tilt Quick Coupler **NEW**
- Steelwrist® Tiltrotator and factory-fit control system
- Range of Volvo Attachments

TOP OF THE CLASS

- True 6t class performance
- Low center of gravity for excellent stability **NEW**
- Superior breakout/tear out forces and lifting capacities **NEW**
- High system pressure delivers impressive tractive force

Precision controls

- Intuitive jogwheel and 5" color display **NEW**
- Proportional fingertip controls
- Smooth combined movements

Volvo Services

- CareTrack: machine monitoring made easy
- Maintenance and repair agreements
- Genuine Volvo Parts
- Financial Services

Outstanding fuel efficiency

- Advanced hydraulic system with load sensing and flow sharing **NEW**
- Eco Mode **NEW**
- Auto-engine shutdown **NEW**
- Engine auto-idle

ECR58F in detail

Engine		
Engine		D2.6H
Max. power at	r/min	2 200
Gross	kW	35.5
	hp	48
According to ISO 3046-1 and SAE J1995		
Max. torque	Nm	174
at engine speed	r/min	1 500
No. of cylinders		4
Displacement	cm^3	2 615
Bore	mm	87
Stroke	mm	110
Compression ratio		18:1
Electrical system		
Voltage	V	12
Battery	V	1 X 12
Battery capacity	Ah	74
Alternator	V/Ah	12 / 70
Swing system		
Max, slew speed	r/min	8.7
Max, slew torque	daNm	1 229
Undercarriage		
Rubber track width	mm	400
Steel track width	mm	380
Bottom/top rollers per side		5 / 1
Track tension		by grease piston
Blade (width x height)	mm	2 000 x 361
Digging Performances		
Standard bucket width (blade, W/O side cutter)	mm	600
Standard bucket mass	kg	113
Standard bucket rated capacity	l	144
Bucket rotation	°	201
Bucket breakout force (ISO)	daN	4 191
Short arm tearout force (ISO)	daN	2 841
With short arm	mm	1 650
Long arm tearout force (ISO)	daN	2 518
With long arm	mm	1 950
Weight and Ground Pressure		
Operating weight according to ISO 6016	kg	5 840
Ground pressure (cab)	kPa	32.8
Transport weight	kg	5 765
With heated cab		
With direct-fit bucket		
With rubber tracks	mm	400
With fuel tank capacity	%	100
With steel tracks	+kg	120
Steel tracks	mm	380
With rubber pads	+kg	160
Rubber pads	mm	400

The forementioned operating weight is given for a ECR58F equipped with long arm (1950 mm, +40kg), and additional counterweigh (170 kg)

Hydraulic system		
Pump type		Variable displacement, load-sensing piston pump.
Maximum system flow	l/min	143
Maximum operating pressure (main pump)	MPa	26
Maximum flow for accessories	l/min	75
Maximum pressure for accessories	MPa	22
Maximum flow for 2nd accessory circuit	l/min	40
Travel System		
Max, drawbar pull	daN	4 748
Max. travel speed low	km/h	2.6
Max. travel speed high	km/h	4.5
Gradeability	°	20
Service Refill		
Fuel tank	l	70
Hydraulic system, total	l	76
Hydraulic tank	l	47
Engine oil	l	10.2
Engine coolant	l	9
Travel reduction unit	l	2 X 0.8
Sound Level		
Interior sound level according to ISO 6396		
L_{pA}	dB	78
External sound level according to ISO 6395 and EU Noise Directive (2000/14/EC) and 474-1:2006 +A1:200		
L_{WA}	dB	97

Specifications

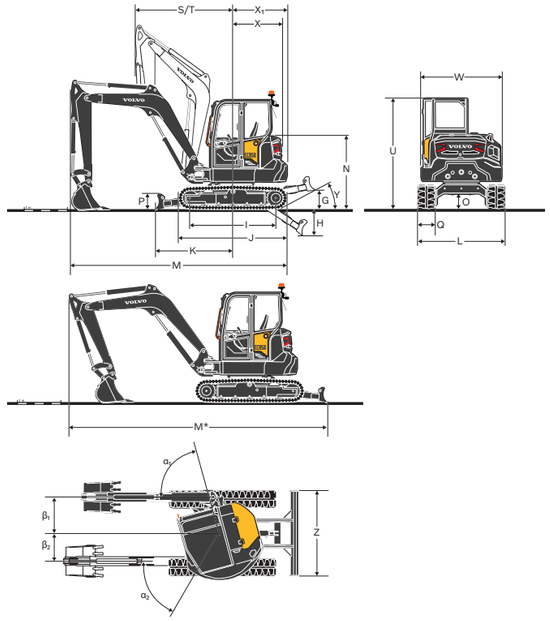

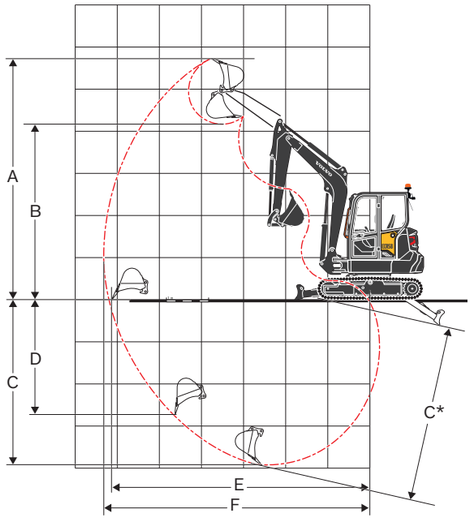

DIMENSIONS				
Description		**Unit**	**ECR58F**	
Arm		**mm**	**1 650**	**1 950**
A	Maximum cutting height	mm	5 565	5 740
B	Maximum dump height	mm	3 996	4 171
C	Digging depth	mm	3 616	3 916
C*	Maximum digging depth	mm	3957	4 249
D	Maximum vertical wall digging depth	mm	2 431	2 710
E	Maximum digging reach at ground level	mm	5 972	6 261
F	Maximum digging reach	mm	6 109	6 391
G	Highest position dozer blade	mm	441	
H	Lowest position dozer blade	mm	610	
I	Tumbler length	mm	2 000	
J	Track length	mm	2 521	
K	Dozer blade, maximum reach at ground level	mm	1 860	
L	Overall width with 400mm rubber tracks	mm	2000	
M	Overall length	mm	5 193	5 044
M*	Transport length	mm	6 105	6 030
N	Overall height of engine hood	mm	1 700	
O	Minimum ground clearance	mm	359	
P	Dozer blade height	mm	361	
Q	Shoe width (rubber)	mm	400	
R	Ground clearance to superstructure	mm	645	
S	Front slew radius	mm	2 466	2 515
T	Front slew radius with maximum offset	mm	1 992	2 035
U	Overall height	mm	2 540	
W	Overall width of superstructure	mm	1 833	
X	Tail slew radius	mm	1 100	1 180
X[1]	Additional counterweight overhang	mm	80	incl.
Y	Angle of approach	°	31	
Z	Dozer blade width	mm	2 000	
α_1	Maximum boom swing angle to the left	deg	75	
β_1	Maximum boom offset to the right	mm	849	
α_2	Maximum boom swing angle to the right	°	55	
β_2	Maximum boom offset to the left	mm	654	

[1]: Option

Specifications

LIFTING CAPACITY ECR58F

These capacities are given for a machine equipped with a cabin, 400mm rubber tracks and without a bucket or quick-coupler.
The below values are in compliance with ISO standard 10567. They do not exceed 75% of the tipping load or 87% of the hydraulic limit with the machine on firm level ground.
Loads market with an asterisk (*) are limited by machine's hydraulic lifting capacity rather than tipping load.
Caution: In accordance with standard EN 474-5, the machine must be equipped to carry out handling operations.
It is the operator's obligation to know and follow the applicable national and local safety regulations.

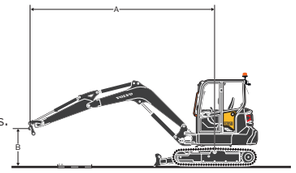

	Lifting point height (B) m	Lifting capacity kg	Lifting point radius (A)										
			2.0 m		3.0 m		4.0 m		5.0 m		Max. reach		Max.
			Along under-carriage	Across under-carriage	Along under-carriage	Across under-carriage	Along under-carriage	Across under-carriage	Along under-carriage	Across under-carriage	Along under-carriage	Across under-carriage	m
Arm: 1 650mm + Dozer blade up	3	kg					1 314*	1 064					
	2	kg			2 029*	1 575	1 312	1 022	926	727	862	676	5.23
	1	kg			1 946	1 454	1 258	972	904	706	828	648	5.3
	0	kg			1 881	1 396	1 220	936	888	691	855	666	5.14
	-1	kg	2 686*	2 686*	1 872	1 388	1 209	926					
	-2	kg	3 289	2 748	1 902	1 415							
Arm: 1 950mm + 170kg Additional counterweight + Dozer blade up	3	kg					1 162*	1 053	1 005	729	936	678	5.21
	2	kg			1 751*	1 562	1 394*	1 007	987	712	842	606	5.51
	1	kg			2 089	1 425	1 341	949	959	686	811	580	5.58
	0	kg	1 244*	1 244*	1 997	1 344	1 292	905	936	665	833	593	5.43
	-1	kg	2 374*	2 374*	1 972	1 323	1 272	886	931	660	921	653	5.04
	-2	kg	3 857*	2 561	1 993	1 341	1 285	898					
Arm: 1 650mm + Dozer blade down	3	kg					1 314*	1 064					
	2	kg			2 029*	1 575	1 534*	1 022	1 327*	727	1 289*	676	5.23
	1	kg			2 702*	1 454	1 791*	972	1 409*	706	1 329*	648	5.3
	0	kg			2 925*	1 396	1 929*	936	1 427*	691	1 364*	666	5.14
	-1	kg	2 686*	2 686*	2 725*	1 388	1 840*	926					
	-2	kg	3 289	2 748	2 095*	1 415							
Arm: 1 950mm + 170kg Additional counterweight + Dozer blade down	3	kg					1 162*	1 053	1 158*	729	1 057*	678	5.21
	2	kg			1 751*	1 562	1 394*	1 007	1 228*	712	1 060*	606	5.51
	1	kg			2 492*	1 425	1 679*	949	1 339*	686	1 130*	580	5.58
	0	kg	1 244*	1 244*	2 857*	1 344	1 870*	905	1 403*	665	1 250*	593	5.43
	-1	kg	2 374*	2 374*	2 785*	1 323	1 860*	886	1 307*	660	1 284*	653	5.04
	-2	kg	3 857*	2 561	2 310*	1 341	1 521*	898					

Equipment

STANDARD EQUIPMENT

Engine

- Volvo 4-cylinders, vertical, in-line, electronically controlled, water-cooled, diesel engine; meeting EU Stage V or EPA Tier 4f environmental regulations. Diesel Oxidation Catalyst and Diesel Particulate Filter exhaust after treatment system with 6000 hours service interval.
- Engine restart prevention system: starter motor is protected against ignition when the engine is already running.
- Safe engine start function: the left console must be raised to operate the starter.
- Time adjustable auto-idling system.
- Eco mode.
- Dry-type dual element air filter.
- Plastic fuel tank with drain plug.
- Protective strainer on the fuel filling pipe.
- Fuel filter with water separator.

Drivetrain

- Axial piston hydraulic motors equipped with an epicyclic reduction gears.
- Automatic two speed travel.
- Multi-disc track brakes, spring-applied and hydraulic released.
- 5 bottom flanged rollers lubricated for life.
- Grease tensioning wheel lubricated for life.

Electric / Electronic control system

- Maintenance free battery.
- IP67 protected electrical system and high quality connectors.
- Battery cut-off switch protected in engine compartment.
- In-cab 12V power socket.
- In-cab USB charging port
- In-cab diagnostic port.
- In-cab fuse box.
- One LED working light on top front left of the cab.

Swing system

- Radial piston hydraulic motor with direct engagement on the ball internal crown wheel (no reduction gears).
- Integrated shockless valve.
- Automatic multi-disc slew brake.
- Centralized and remote lubrication of crown wheel & ball bearing.

Undercarriage

- "X" shape, box welded fabricated frame with sloping side members.
- 2 Tie-down points on the dozer blade.
- 2 Tie-down points on the frame.
- 2 Integrated lifting points.
- Sturdy removeable protecting covers for track motors and slew system.
- 400HB weld-on edge on dozer blade

Hydraulic system

- Variable displacement, load-sensing piston pump.
- Closed centre flow-sharing main control valve.
- Single and double acting hydraulic circuit for auxiliaries.
- In-cab electrically controled changeover valve for main auxiliary circuit.
- Proportional controls with flow and direction adjustment for all auxiliary circuits.
- Cylinder cushoning on boom up, arm in and out.
- Large hinged and key-locked access panel.
- Patented filtering and filling element.
- Single layer cooling system.
- Plastic tank with drain plug.

STANDARD EQUIPMENT

Cab

- FOPS on top level 1 (Falling Object Protective Structure).
- TOPS (Tip-Over Protective Structure).
- ROPS (Roll-Over Protective Structure).
- Cushioned operator station.
- Height adjustable seat, consoles and joysticks; all suspended together.
- Retractable 50mm orange seat belt with warning indicator.
- Highly visible orange handrail and cab entry step.
- Large door access.
- Large and roomy uncluttered floor with easy to clean floor mat.
- Gas-strutt assisted front window opening.
- Full opening front bay with in-cab storage for the front lower window.
- Front windscreen wiper and washer nozzle.
- Right hand side sliding window.
- Heating system.
- Multiple adjustable air vents.
- Filtered air inlet with large size and easy to replace element.
- Cab inside light.
- LCD dislplay.
- Large capacity key-locked toolbox.

Digging equipment

- Monobloc box welded 2.85m boom.
- Boom cylinder rod protection.
- In-track swing frame: the boom offset cylinder is below the cab.
- Integrated lifting point on the boom.
- Monobloc box welded arm.
- Long-life steel bushings.
- Hardened, pre-lubricated and corrosion resistant pins.
- Remote greasing point for arm cylinder with ground level access.
- 50 hours greasing intervals.

Instrumentation and monitoring

- High contrast LCD display with day and night modes enabling good readability whatever lighting conditions.
- Gauges for fuel and coolant temperature levels, engine speed, auxiliary and boom offset flows.
- Icones & graphics for engine and work modes.
- Colour coded messages and help menu.
- Hourmeter.
- Self-acting emergency engine shutdown. Prevents failures in case of coolant overheating or too low engine oil pressure.
- Warning lights for hydraulic filter and air filter restriction.
- Several warning lights, coupled to an audible signal, in the event of malfunction (overheating, drop in oil pressure, low battery voltage...)

Machine control system

- Finger tip control for boom offset.
- Finger tip control for auxiliary circuit.
- Breaker toggle switch on right joystick.
- Jogwheel for easy navigation and engine speed adjustment.
- Automatic locking device for the controls when the left console is raised.
- Pressure accumulator to lower the equipment on the ground when the engine is switched off.
- Two speed change button on the dozer lever.
- Large travel pedals.

Official approval

- Machine conforming to European directive 2006/42/EC.
- Noise emissions in the environment conforming to directive 2000/14/EC.
- Hand Arm Vibrations - Whole Body Vibrations compliant with directive 2002/44/EC.
- Electromagnetic compatibility (EMC) conforming to European directive 2004/108/EC and its amendments.
- Object handling device conforming to EN 474-1 and EN 474-5 standards.
- FOPS on top level 1 conforming to ISO 10262 standard.
- TOPS conforming to ISO 12117 and EN 13531 standards.
- ROPS conforming to ISO 3471-1 and / SAE J1040 standards.

Equipment

STANDARD AND OPTIONAL EQUIPMENT

• = Standard
o = Optional

Engine	
ECO mode	•
Engine auto idling with time adjustment	•
Engine auto shutdown with time adjustment	o
35lpm fuel filling pump with auto-stop	o
Hydraulics	
Proportional finger tip control for boom offset	•
Proportional finger tip control for accessories	•
Single and double acting main accessory circuit	•
”Detent” mode for main accessory circuit	•
Work modes to match machine settings to accessories in use	•
Bucket or grapple change over valve	o
Second accessory circuit	o
Third accessory circuit (for side tilting quick coupler)	o
Secondary relief valves for auxiliaries (22 MPa)	•
Hydraulic drain including flat face coupling for accessories	o
Flat face hydaulic quick couplings for main and second acces-sories circuits	o
Single acting circuit for quick couplers	o
Double acting circuit for quick couplers	o
Boom and arm safety lifting valves with overload indicator	o
Boom, arm and dozer blade safety lifting valves with overload indicator	o
Safety valve certification	o
Mineral hydraulic oil VG46	o
Bio hydraulic oil VG46 (PANOLIN®)	o
Mineral hydraulic oil VG68	o
Mineral hydraulic oil VG32	o
Bio hydraulic oil VG32 (PANOLIN®)	o
Operator environment	
Cab with heater	•
Cab with heater and manual air conditioning	o
Vinyl high back seat	o
Textile high back seat	o
Head rest	o
3” Seat belt	o
Height adjustable arm rest	•
Large size monoblock travel pedals	•
Bottle holder	•
Large capacity storage box	•
Lockable backrest storage box	o
Net	•
Coat hook	•
Ceiling light	•
Radio preparation	•
Radio (AUX, USB, SD, Bluetooth, DAB)	o
1 x 12V power socket	•
2 x USB charging ports	•
Control pattern change	o
Travel alarm	o
Codelocked anti-theft device	o
Additional hour meter	o
Large capacity, key-lockable toolbox	•
Undercarriage	
400mm rubber tracks	o
400mm rubber pads on steel chain	o
380mm steel tracks	o
400mm add-on rubber pads on steel shoe	o
Standard dozer blade	•
Floating dozer blade	o

STANDARD AND OPTIONAL EQUIPMENT

• = Standard
o = Optional

Machine exterior	
Right rearview mirror	o
Left rearview mirror	o
Front left LED workligt on cab roof	•
Front right LED workligt on cab roof	o
Rear right LED worklight on cab roof	o
Amber flashing LED beacon	o
2 x cab mounted LED worklights illuminating left & right sides of the machine	o
Green flashing LED beacon (lights-up when to operator has buckled the seat belt)	o
Protected LED worklight on the boom	o
Additional counterweight	o
Several level of paint customisation (RAL specifications) to match with your corporate identity	o
Digging equipment	
Standard arm	o
Long arm + additional counterweight	o
Service and maintenance	
In-cab diagnostick socket	•
Service reminder	•
Tool kit	o
Attachments	
Volvo quick coupler mechanical or hydraulic (pin-on)	o
LH hydraulic quick coupler with lifting hook (HS03)	o
Symetrical-type hydraulic quick coupler with lifting hook (S40)	o
Hydraulic side tilting quick coupler with lifting hook (HS03 & S40)	o
Tiltrotators (S40)	o
A choice of 30cm / 62L up to 90cm / 235L general purpose buckets	o
A choice of general purpose, twin pick or spade nose teeth	o
Bolt-on side cutters for general purpose buckets	o
A choice of fix or hydraulic tiltable ditching buckets	o
Hydraulic breaker HB06LN	o
Telematics	
Care Track	o

SELECTION OF VOLVO OPTIONAL EQUIPMENT

Dozer float

Hands-free phone compatible / BlueTooth® radio

Custom color

Long arm, extra counterweight

Auxiliary hydraulics for all attachments

Track types

Not all products are available in all markets. Under our policy of continuous improvement, we reserve the right to change specifications and design without prior notice. The illustrations do not necessarily show the standard version of the machine.