Volvo Excavators 24.7-28.4 t 218 hp

EC260

Volvo Construction Equipment

EC260

A versatile machine with a modern cab that enhance the operator experience, pushing the boundaries of their performance.

Modern comforts give you an edge

Whether general construction, trenching, or even quarrying – the EC260 is a versatile machine built for hard work across a wide range of applications. With enhanced machine access, superior visibility, increased service intervals and improved fuel efficiency, this excavator delivers all the safety, comfort, reliability and performance you would expect from a Volvo machine

Operator comfort

- More precise controls
- Quieter cab
- Personalized settings for greater comfort
- ROPS cab as standard

Serviceability

- Ground level access for service
- Long service intervals
- Grouped filters and lubrication points
- Quick and easy oil changes

Fuel Efficiency

- Up to 15% improvement
- Powerful and efficient Volvo engine
- 10% lower engine RPM
- 5% hydraulic system improvement

Productivity

- Volvo Active Control
- Dig Assist with On-Board Weighing
- Boom/Swing & Boom/Travel priority functions

Volvo EC260 in Detail

Engine		
Engine	Volvo	D8L
Max power at	r/min	1 720
Net, ISO 9249/SAE J1349	kW	159
	hp	216
Gross, ISO 14396/SAE J1995	kW	160
	hp	218
Max torque	Nm	1 190
at engine speed	r/min	1 250
No. of cylinders		6
Displacement	l	7.7
Bore	mm	110
Stroke	mm	135

Electrical system		
Voltage	V	24
Batteries	V	2 x 12
Battery capacity	Ah	180 x 2
Alternator	V/A	28 / 120
Start motor	V - kW	24 - 5.5

Undercarriage and structures		
The undercarriage has a robust X-shaped frame. Greased and sealed track chains are standard.		
Track shoes		2 x 51
Link pitch	mm	190
Shoe width	mm	600
Shoe width, triple grouser	mm	600/700/800
Shoe width, triple grouser (HD)	mm	600
Shoe width, double grouser	mm	600 / 700
Bottom rollers		2 x 9
Top rollers		2 x 2

Swing system		
The swing system uses an axial piston motors, driving a planetary gearbox for maximum torque. An automatic holding brake and antirebound valve are standard.		
Max. slew speed	r/min	11.7
Max. slew torque	kNm	91.7

Travel System		
Each track is powered by an automatic two-speed shift travel motor. The track brakes are multi-disc, spring-applied and hydraulic released. The travel motor, brake and planetary gears are well protected within the track frame.		
Max. drawbar pull	kN	217
Max. travel speed (low)	km/h	3.5
Max. travel speed (high)	km/h	5.5
Gradeability	°	35

Cab

The operator's cab has easy access via a wide door opening. The cab is supported on hydraulic dampening mounts to reduce shock and vibration levels. These along with sound absorbing lining provide low noise levels. The cab has excellent all-round visibility. The front windshield can easily slide up into the ceiling, and the lower front glass can be removed and stored in the side door.
Integrated airconditioning and heating system: The pressurized and filtered cab air is supplied by an automaticallycontrolled fan. The air is distributed throughout the cab from 14 vents.
Ergonomic operator's seat: The adjustable seat and joystick console move independently to accommodate the operator. The seat has 12 different adjustments plus a seat belt for the operator's comfort and safety. Refrigerant of the type R134a is used when this machine is equipped with air conditioning. Contains fluorinated greenhouse gas R134a, Global Warming Potential 1430 CO_2-eq.

Sound Level

Sound pressure level in cab according to ISO 6396		
L_{pA}	dB	72
External sound level according to ISO 6395 and EU Noise Directive 2000/14/EC		
L_{WA}	dB	106

Service Refill

Fuel tank	l	450
Hydraulic system, total	l	385
Hydraulic tank	l	183
Engine oil	l	30
Engine coolant	l	44
Slew reduction unit	l	5.9
Travel reduction unit	l	2 x 5

Hydraulic system

The new electro-hydraulic system and new MCV (main control valve) use intelligent technology to control on-demand flow for highproductivity, high-digging capacity and excellent fuel consumption.
The following important functions are included in the system for optimum performance:
Summation system: Combines the flow of both hydraulic pumps to ensure quick cycle times and high productivity.
Boom priority: Gives priority to the boom operation for faster raising when loading or performing deep excavations.
Arm priority: Gives priority to the arm operation for faster cycle times in leveling and for increased bucket filling when digging.
Swing priority: Gives priority to swing functions for faster simultaneous operations.
Regeneration system: Prevents cavitation and provides flow to other movements during simultaneous operations for maximum productivity.
Power boost: All digging and lifting forces are increased.
Holding valves: Boom and arm holding valves prevent the digging equipment from creeping.

Main pump: 2 x variable displacement axial piston pumps		
Maximum flow	l/min	2 x 240
Pilot pump: Gear pump		
Maximum flow	l/min	20
Max. pressure		
Implement	MPa	33.3 / 36.3
Travel circuit	MPa	36.3
Slew circuit	MPa	27.9
Pilot circuit	MPa	3.9

Hydraulic Cylinders

Mono boom		2
Bore x Stroke	ø x mm	135 x 1 345
Arm		1
Bore x Stroke	ø x mm	140 x 1 665
Bucket		1
Bore x Stroke	ø x mm	130 x 1 150
ME Bucket		1
Bucket for LR boom		1
Bore x Stroke	ø x mm	100 x 865

Specifications

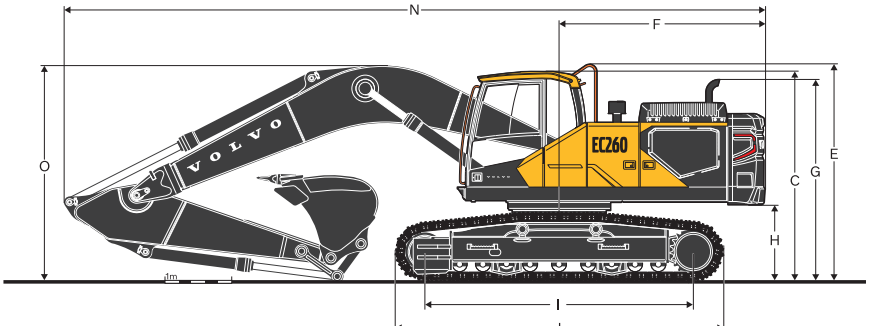

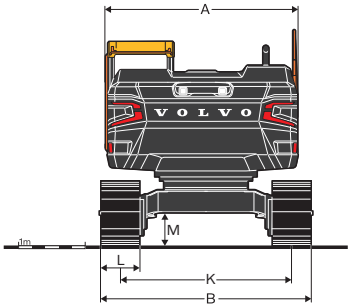

DIMENSIONS

	Unit	EC260F L		EC260F LR
Boom	**m**	**6.0**		**10.2**
Arm	**m**	**2.5**	**2.97**	**7.85**
A. Overall width of upper structure	mm	2 890	2 890	2 890
B. Overall width	mm	3 190	3 190	3 190
C. Overall height of cab	mm	3 040	3 040	3 040
D. Overall height of handrail	mm	3 310	3 310	3 310
F. Tail swing radius	mm	3 080	3 080	3 155
G. Overall height of engine hood	mm	2 680	2 680	2 680
H. Counterweight clearance *	mm	1 045	1 045	1 045
I. Tumbler length	mm	3 850	3 850	3 850
J. Track length	mm	4 650	4 650	4 650
K. Track gauge	mm	2 590	2 590	2 590
L. Shoe width	mm	600	600	600
M. Min. ground clearance *	mm	470	470	470
N. Overall length	mm	10 295	10 215	14 515
O. Overall height of boom	mm	3 110	3 330	3 065

* Without shoe grouser

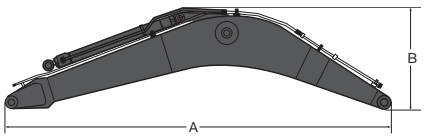

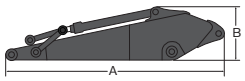

DIMENSIONS

Description	Unit	Boom		Description	Unit	Arm		
	m	6.0 HD	10.2 LR		m	2.5 HD	2.97 HD	7.85 LR
A. Length	mm	6 215	10 405	A. Length	mm	3 585	4 055	8 965
B. Height	mm	1 695	1 505	B. Height	mm	975	975	1 205
Width	mm	725	725	Width	mm	510	510	385
Weight	kg	2 370	3 070	Weight	kg	1 360	1 430	1 725

* Includes arm cylinder, piping and pin

* Includes cylinder, linkage and pin

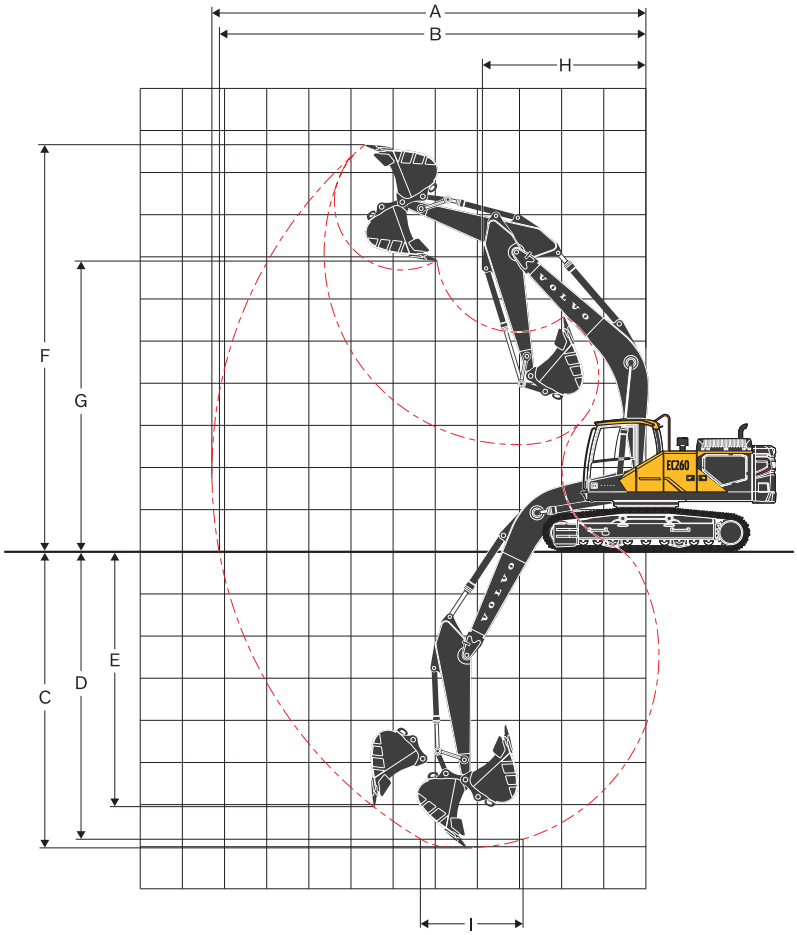

WORKING RANGES WITH DIRECT FIT BUCKET					
Description		**Unit**	**EC260F L**		**EC260F LR**
Boom		**m**	**6.0**		**10.2**
Arm		**m**	**2.5**	**2.97**	**7.85**
A. Max. digging reach		mm	9 880	10 260	18 305
B. Max. digging reach on ground		mm	9 690	10 080	18 210
C. Max. digging depth		mm	6 500	6 980	14 350
D. Max.digging depth (I=(2.44 m level)		mm	6 280	6 740	14 240
E. Max. vertical wall digging depth		mm	5 650	5 930	12 470
F. Max. cutting height		mm	9 620	9 685	14 890
G. Max. dumping height		mm	6 700	6 800	12 580
H. Min. front swing radius		mm	3 915	3 890	5 720
DIGGING FORCES WITH DIRECT FIT BUCKET					
Breakout force (bucket)	Normal	SAE J1179	kN	152	152	68
	Power boost	SAE J1179	kN	166	166	-
	Normal	ISO 6015	kN	171	171	78
	Power boost	ISO 6015	kN	186	186	-
Tearout force (arm)	Normal	SAE J1179	kN	133	115	44
	Power boost	SAE J1179	kN	145	125	-
	Normal	ISO 6015	kN	137	118	45
	Power boost	ISO 6015	kN	149	129	-

Specifications

GROUND PRESSURE

EC260F L

Description	Shoe width	Operating weight	Ground pressure	Overall width	Operating weight	Ground pressure	Overall width
	mm	kg	kPa	mm	kg	kPa	mm
Triple grouser	600	27 120	52.3	3 190	27 030	52.1	3 190
	600 (HD)	27 350	52.8	3 190	27 260	52.6	3 190
	700	27 410	45.3	3 290	27 320	45.2	3 290
	800	27 700	40.1	3 390	27 610	39.9	3 390
Double grouser	600	27 330	52.7	3 190	27 240	52.6	3 190
		EC260F L, 6.0 m GP boom, 2.97 m GP arm, 1 358 kg bucket, 4 950 kg counterweight			**EC260F L, 6.0 m HD boom, 2.5 m HD arm, 1 358 kg bucket, 6 200 kg counterweight**		

EC260F LR

Description	Shoe width	Operating weight	Ground pressure	Overall width
	mm	kg	kPa	mm
Triple grouser	600	27 250	52.6	3 190
	600 (HD)	27 480	53.0	3 190
	700	27 540	45.5	3 290
	800	27 830	40.3	3 390
Double grouser	600	27 460	53.0	3 190
		EC260F LR, 10.2 m LR boom, 7.85 m LR arm, 452 kg bucket, 6 900 kg counterweight		

BUCKET SELECTION GUIDE

EC260F with 600 mm shoe, 4 950 kg counterweight

Bucket Type	Capacity	Cutting width	Weight	Recommended maximum material density (kg/m³)		
				6.0 m HD Boom		10.2 m LR Boom
	L	mm	kg	2.5 m	2.97 m	7.85 m
V1	1 250	1 340	948	1 800	1 800	
	1 400	1 435	1 067	1 800	1 800	
	1 510	1 500	1 097	1 800	1 800	
	1 450	1 520	1 025	1 800	1 800	
V2	520	1 020	452			1 600
	1 200	1 340	965	1 800	1 800	
	1 200	1 340	977	1 800	1 800	
	1 300	1 411	997	1 800	1 800	
	1 300	1 411	1 018	1 800	1 800	
	1 400	1 510	1 083	1 800	1 800	
V4	460	1 250	422			1 600
	1 180	1 800	879	1 800	1 800	
	560	600	800	1 800	1 800	
	560	600	862	1 800	1 800	
	620	750	823	1 800	1 800	
	620	750	882	1 800	1 800	
	540	900	403			1 600
	540	900	434			1 600
	770	900	983	1 800	1 800	
	950	1 090	1 012	1 800	1 800	
	1 140	1 240	1 179	1 800	1 800	
	1 320	1 390	1 249	1 800	1 800	
	1 320	1 390	1 196	1 800	1 800	
	1 320	1 390	1 259	1 800	1 800	
	1 320	1 390	1 211	1 800	1 800	
	1 450	1 490	1 249	1 800	1 800	
	1 510	1 540	1 348	1 800	1 800	
	1 510	1 540	1 294	1 800	1 800	
	1 510	1 540	1 358	1 800	1 800	
	1 510	1 540	1 316	1 800	1 800	
	1 510	1 540	1 439	1 800	1 800	
	1 690	1 690	1 439	1 800	1 800	
	1 760	1 740	1 435	1 800	1 800	
	1 760	1 740	1 497	1 800	1 800	
	1 760	1 740	1 453	1 800	1 800	
	560	600	870	2 100	2 100	
	560	600	937	2 100	2 100	
	620	750	947	2 100	2 100	
	620	750	892	2 100	2 100	
	620	750	959	2 100	2 100	
	620	750	967	2 100	2 100	
	1 140	1 240	1 279	2 100	2 100	
	1 140	1 240	1 215	2 100	2 100	
	1 140	1 240	1 282	2 100	2 100	
	1 140	1 240	1 290	2 100	2 100	
	1 320	1 390	1 289	2 100	2 100	
	1 320	1 390	1 305	2 100	2 100	
	1 320	1 390	1 356	2 100	2 100	
	1 320	1 390	1 301	2 100	2 100	
	1 320	1 390	1 368	2 100	2 100	
	1 320	1 390	1 384	2 100	2 100	
	1 510	1 540	1 377	2 100	2 000	
	1 510	1 540	1 444	2 100	2 000	
	1 510	1 540	1 388	2 100	2 000	
	1 510	1 540	1 455	2 100	2 000	
	1 510	1 540	1 477	2 100	2 000	
	1 760	1 740	1 531	1 900	1 800	
	1 760	1 740	1 596	1 900	1 800	

For long reach boom and arm configuration, Volvo recommends to use 0.52 m³ bucket
Please consult with your Volvo dealer for the proper match of buckets and attachments to suit the application.
The recommendations are given as a guide only, based on typical operation conditions.
Bucket capacity based on ISO 7451, heaped material with a 1:1 angle of repose.

Maximum material density
D: > 1 900 kg/m³: Wet mud, Iron ore
C: 1 700 ~ 1 800 kg/m³: Granite, Wet sand, Well blasted rock
B: 1 400 ~ 1 600 kg/m³: Wet earth and clay, Limestone, Sandstone
A: 1 200 ~ 1 300 kg/m³: Coal, Caliche, Shale
X : Not recommended

Specifications

LIFTING CAPACITY EC260F L

Lifting capacity at the arm end without bucket.
For lifting capacity including bucket, simply subtract actual weight of the direct fit bucket or the bucket with quick coupler from the following values.

	Lifting hook related to ground level		1.5 m		3.0 m		4.5 m		6.0 m		7.5 m		Max. reach		Max.
			Along UC	Across UC	Along UC	Across UC	Along UC	Across UC	Along UC	Across UC	Along UC	Across UC	Along UC	Across UC	m
Boom : 6.0 m HD Arm : 2.5 m HD Shoe : 600 mm CWT : 4 950 kg	6.0 m	kg							*8 830	6 370			*9 040	5 640	6.43
	4.5 m	kg							*9 220	6 250			7 780	4 380	7.43
	3.0 m	kg					*13 040	9 160	*10 520	5 960	7 540	4 210	6 760	3 760	8.02
	1.5 m	kg					*16 630	8 380	10 420	5 620	7 360	4 050	6 290	3 460	8.3
	0 m	kg					16 140	7 890	10 090	5 330	7 190	3 900	6 190	3 370	8.29
	-1.5 m	kg					15 920	7 720	9 900	5 170	7 090	3 810	6 460	3 490	8.01
	-3.0 m	kg			*16 840	14 960	15 940	7 730	9 860	5 140			7 230	3 880	7.41
	-4.5 m	kg			*23 880	15 220	16 130	7 880	9 990	5 250			9 080	4 830	6.4
	-6.0 m	kg					*12 940	8 280					*12 140	7 720	4.73
Boom : 6.0 m HD Arm : 2.5 m HD Shoe : 600 mm CWT : 6 200 kg	6.0 m	kg							*8 830	7 340			*9 040	6 530	6.43
	4.5 m	kg							*9 220	7 220			8 780	5 120	7.43
	3.0 m	kg					*13 040	10 570	*10 520	6 930	8 530	4 950	7 660	4 440	8.02
	1.5 m	kg					*16 630	9 790	11 780	6 580	8 350	4 790	7 160	4 110	8.3
	0 m	kg					18 290	9 290	11 440	6 300	8 180	4 640	7 060	4 030	8.29
	-1.5 m	kg					18 070	9 130	11 250	6 140	8 080	4 550	7 360	4 170	8.01
	-3.0 m	kg			*16 840	*16 840	18 080	9 140	11 210	6 100			8 240	4 630	7.41
	-4.5 m	kg			*23 880	17 800	*17 360	9 290	11 350	6 220			10 320	5 720	6.4
	-6.0 m	kg					*12 940	9 680					*12 140	9 030	4.73
Boom : 6.0 m HD Arm : 2.97 m HD Shoe : 600 mm CWT : 4 950 kg	6.0 m	kg											*8 390	5 160	6.92
	4.5 m	kg							*8 550	6 440	7 830	4 460	7 240	4 120	7.85
	3.0 m	kg			*17 340	*17 340	*11 890	9 450	*9 900	6 130	7 680	4 330	6 370	3 580	8.41
	1.5 m	kg					*15 530	8 600	10 570	5 740	7 470	4 150	5 960	3 310	8.67
	0 m	kg					16 260	7 980	10 180	5 410	7 270	3 970	5 860	3 220	8.67
	-1.5 m	kg			*8 690	*8 690	15 910	7 710	9 940	5 200	7 130	3 850	6 070	3 300	8.4
	-3.0 m	kg	*10 980	*10 980	*16 500	14 650	15 860	7 670	9 850	5 130	7 100	3 820	6 690	3 620	7.83
	-4.5 m	kg	*18 730	*18 730	*25 600	14 930	16 010	7 780	9 930	5 200			8 120	4 350	6.89
	-6.0 m	kg			*20 670	15 460	*14 860	8 100					*12 140	6 330	5.37

Notes: 1. Machine in “Fine Mode-F” (Power Boost) for lifting capacities. 2. The above loads are in compliance with SAE J1097 and ISO 10567 Hydraulic Excavator Lifting Capacity Standards. 3. Rated loads do not exceed 87% of hydraulic lifting capacity or 75% of tipping load. 4. Rated loads marked with an asterisk (*) are limited by hydraulic capacity rather than tipping load.

Equipment

STANDARD AND OPTIONAL EQUIPMENT	
• = Standard / o = Optional	
Engine	
Turbocharged, 4 stroke diesel engine with water cooling, direct injection and charged air cooler that meets T3 requirements	•
Cooling system by Direct Fan	•
Cooling system by Hydraulic Fan	o
Air filter, High efficiency	o
Air intake heater	•
Cyclone pre-cleaner	•
Fuel shut off valve	•
Engine block heater	o
Coolant heater by diesel	o
Precleaner, oil bath	o
Delayed engine Shutdown	•
Automatic engine shutdown	•
Water separator with heater	o
Fuel filter and water separator	•
Electric / Electronic control system	
Anti-theft with code lock system	•
Automatic idling system	•
Standard light	•
Extra light	o
Master electrical disconnect switch	•
Engine restart prevention circuit	•
Undercarriage and structures	
3-point side access	•
Guardrail, fixed/foldable	o
Lower frame, LC	o
Lower frame, STD	o
Link 600 / 700 / 800 mm triple grouser shoe	o
Link 600 mm triple grouser shoe, HD	o
Link 600 mm double grouser shoe	o
Dual toolbox	•
Undercover STD / HD	o
Hydraulic system	
EH (Electro-Hydraulic) control system	•
One touch power boost	•
Priority Adjustment	•
Boom down speed control	•
Shock reduction function	•
Joystick, Semi-long / 4 switch / 4 switch & 1 proportional / Simple L8 / L8	o
Hydraulic oil mineral 32 / 46 / 68	o
Longlife hyd oil mineral 32 / 46 / 68	o
Pattern change	•
Boom float function	o
Comfort driving control	o
Dedicated drain line	o
Hose rupture valve for boom	o
Hose rupture valve for arm	o

STANDARD AND OPTIONAL EQUIPMENT	
• = Standard / o = Optional	
Cab and interior	
ROPS certified cab	•
FOG (Falling Object Guard)	o
FOPS (Falling Object Protection Structure)	o
8” HD display	•
Mechanical sus/Air sus seat	o
Seat belt, 2 inch 2 point / 3 inch 2 point / 3 inch 3 point	o
Front rain shield	o
Sun screens, front, roof, rear	•
Lower wiper	o
Sun shield, roof hatch	o
Safety net	o
Travel pedals and hand levers	•
Adjustable operator seat and joystick control console	•
Heater & air-conditioner, automatic	•
Air-conditioner, automatic	o
AM / FM / USB / Bluetooth stereo with Keypad	•
Large storage area	•
Pull-up type front window	•
Removable lower windshield	•
Digging equipment	
Boom: 6.0 m monoblock	o
Arm: 2.97 m	o
Arm: 2.5 m	o
Machine controls	
Kinematic sensor package	o
Volvo Co-Pilot 2nd display, 12.8» touchable Full HD	o
Dig Assist, Start	o
Dig Assist, 2D	o
Dig Assist, In-Field Design	o
Dig Assist, Topcon 3D-MC	o
Dig Assist, Infield-Design Advanced	o
Dig Assist, On-Board Weighing	o
Dig Assist, Laser Receiver	o
Volvo Active Control	o
Dig Assist, Boundary Limit	o
Service and maintenance	
Swing out A/C condenser	•
Fuel filler pump	o
Jump start connector	o
Tool kit	o
Safety and security	
Travel alarm, beep / white noise	o
Flashing beacon, LED	o
Rear view camera	o
Side view camera	o
HD VSV (Volvo Smart View)	o

Not all products are available in all markets. Under our policy of continuous improvement, we reserve the right to change specifications and design without prior notice.
The illustrations do not necessarily show the standard version of the machine.

Volvo Smart View

Volvo Smart View with Obstacle Detection provides operators with a 360° view of the machines surroundings thanks to the camera and the new radar detection system. This high technology can identify obstacles as either an object or a human being, allowing the operator to take appropriate action.

Stay connected

In the comfort of the new cab, you can charge your mobile phone wirelessly or plugged in. You also have the option to use USB connections to access your music playlists or podcasts. The Bluetooth speaker enables you to have clear communication when making a phone call.

Comfort

The new style cab's ambition is to being more comfortable and make your work easier. A handy storage space allows you to store your coolbox or shoes while you work. You will enjoy reduced noise levels, built-in sunscreen and improved HVAC. Moreover, the new comfortable seat offer will allow to reduce the operator fatigue when working all day.

Fuel efficiency

In the new Volvo excavators our improved electro-hydraulic system reduces your fuel consumption dramatically. It is done by regulating engine speed and hydraulic flow rate based on the task at hand. This ensures that only the necessary amount of energy is used, leading to improved fuel efficiency and lower operating costs.

Outstanding cooling performance

The EC260 is equipped with smart electric fans cooling system. It automatically adjusts independently the fans speed according to engine coolant temperature, hydraulic temperature and hydraulic workload. This minimizes unnecessary energy consumption and improve overall fuel efficiency. By reducing engine load and preventing overheating, the system ensures optimum excavator performance, extends component life and lowers operating costs.

New electro-hydraulic system

At the heart of the fuel efficiency improvements is the new electro-hydraulic system with enhanced main control valve (MCV). This intelligent technology uses electronic sensors to monitor the operator's movements and send signals to the machine's on-board computer (ECU) which processes the information and sends commands to the main control valve.
The result is smooth and precise movement of the excavator's boom, bucket, and other hydraulic functions allowing for more accurate digging and loading.

Dig Assist

A must-have on the modern construction site, Dig Assist provides unrivalled machine guidance and control technology, enabling operators to work with the highest levels of precision and accuracy. The addition of On-Board Weighing provides real-time insights into the bucket's load, helping to eliminate over-loading, underloading, reweighing and waiting times.

Productivity

Advanced electric control joystick and full electric travel pedals provide lightning-fast response times. Boom/Swing priority functions help operators work with speed and ease by prioritizing one function over another, improving cycle times.

Serviceability

Minimizing downtime is key to protect your total cost of ownership. Easy access, clean and quick oil changes, as well as 1 000-hour intervals for engine oil, oil and fuel filter further increase your machine availability. Swing out condenser also makes cleaning of the radiator and oil cooler more convenient.