Volvo Excavators 28.5 - 34.3 t 228 hp

EC260

Volvo Construction Equipment

EC260

A versatile machine with a modern cab that enhance the operator experience, pushing the boundaries of their performance.

Modern comforts give you an edge

Whether general construction, trenching, or even quarrying – the EC260 is a versatile machine built for hard work across a wide range of applications. With enhanced machine access, superior visibility, increased service intervals and improved fuel efficiency, this excavator delivers all the safety, comfort, reliability and performance you would expect from a Volvo machine.

Operator comfort

- More precise controls
- Quieter cab
- Personalized settings for greater comfort
- ROPS cab as standard

Smart View with Obstacle Detection

- Increased safety onsite and for the operator
- Radar warns for items outside the screen
- HD screen
- Human identifying alarm separate from other obstacles

Serviceability

- Ground level access for service
- Long service intervals
- Grouped filters and lubrication points
- Quick and easy oil changes

Fuel Efficiency

- Up to 8% improvement
- Powerful and eficient Volvo engine
- 3% lower engine RPM
- 5% hydraulic system improvement

Productivity

- Volvo Active Control
- Dig Assist with On-Board Weighing
- Electro-hydraulic system
- Boom/Swing & Boom/Travel priority functions

Co-Pilot

The new Volvo Co-Pilot features a new 12.8" display with full HD resolution. Associated with the new HD side and rear camera, it gives better visibility on your operations. Both hardware and software improvements provide increased control on the Dig Assist applications.

Smooth Control

You will find the new joystick controls offer smoother, easier operation. Because the controls are more precise, it is easier for you to achieve what you are trying to do, leading to better machine performance.

Volvo Smart View

Volvo Smart View with Obstacle Detection provides operators with a 360° view of the machines surroundings thanks to the camera and the new radar detection system. This high technology can identify obstacles as either an object or a human being, allowing the operator to take appropriate action.

Stay connected

In the comfort of the new cab, you can charge your mobile phone wirelessly or plugged in. You also have the option to use USB connections to access your music playlists or podcasts. The Bluetooth speaker enables you to have clear communication when making a phone call.

Comfort

The new style cab's ambition is to being more comfortable and make your work easier. A handy storage space allows you to store your coolbox or shoes while you work. You will enjoy reduced noise levels, built-in sunscreen and improved HVAC. Moreover, the new comfortable seat offer will allow to reduce the operator fatigue when working all day.

Fuel efficiency

In the new Volvo excavators our improved electro-hydraulic system reduces your fuel consumption dramatically. It is done by regulating engine speed and hydraulic flow rate based on the task at hand. This ensures that only the necessary amount of energy is used, leading to improved fuel efficiency and lower operating costs.

Outstanding cooling performance

The EC260 is equipped with a smart cooling system that consists of electric and hydraulic fans. It automatically adjusts fan speed according to engine coolant temperature and hydraulic workload. This minimizes unnecessary energy consumption and improves overall fuel efficiency.
By reducing engine load and preventing overheating, the system ensures optimum excavator performance, extends component life and lowers operating costs.

New electro-hydraulic system

At the heart of the fuel efficiency improvements is the new electro-hydraulic system with enhanced main control valve (MCV). This intelligent technology uses electronic sensors to monitor the operator's movements and send signals to the machine's on-board computer (ECU) which processes the information and sends commands to the main control valve. The result is smooth and precise movement of the excavator's boom, bucket, and other hydraulic functions allowing for more accurate digging and loading.

Dig Assist

A must-have on the modern construction site, Dig Assist provides unrivalled machine guidance and control technology, enabling operators to work with the highest levels of precision and accuracy.
The addition of On-Board Weighing provides real-time insights into the bucket's load, helping to eliminate over-loading, underloading, reweighing and waiting times.

Productivity

Advanced electric control joystick and full electric travel pedals provide lightning-fast response times. Boom/Swing priority functions help operators work with speed and ease by prioritizing one function over another, improving cycle times.

Serviceability

Minimizing downtime is key to protect your total cost of ownership. Easy access, clean and quick oil changes, as well as 1 000-hour intervals for engine oil, oil and fuel filter further increase your machine availability. Swing out condenser also makes cleaning of the radiator and oil cooler more convenient.

Volvo EC260 in detail

Engine

The latest generation, Volvo engine Stage V emissions compliant diesel engine fully meets the demands of the latest, emsissions regulations. Featuring Volvo Advanced Combustion Technology (V-ACT), it is designed to deliver superior performance and fuel efficiency. The engine uses precise, high pressure fuel injectors, turbo charger and air-to-air intercooler, and electronic engine controls to optimize machine performance.
- **Air Filter:** 3-stage with precleaner
- **Automatic Idling System:** Reduces engine speed to idle when the levers and pedals are not activated resulting in less fuel consumption and low cab noise levels.

Engine	Volvo	Volvo D8M
Max power at	r/min	1 600
Net, ISO 9249/SAE J1349	kW	167
	hp	227
Gross, ISO 14396/SAE J1995	kW	168
	hp	228
Max torque	Nm	1 166
at engine speed	r/min	1 350
No. of cylinders		6
Displacement	l	7.7
Bore	mm	110
Stroke	mm	135

Electrical system

High-capacity electrical system that is well protected. Waterproof double-lock harness plugs are used to secure corrosion-free connections. The main relays and solenoid valves are shielded to prevent damage. The master switch is standard. Contronics provides advanced monitoring of machine functions and important diagnostic information.

Voltage	V	24
Batteries	V	2 x 12
Battery capacity	Ah	170
Alternator	V/A	28 / 120
Start motor	V - kW	24 / 5.5

Undercarriage and structures

The undercarriage has a robust X-shaped frame. Greased and sealed track chains are standard.

		EC260F L/LR
Track shoe		2 x 51
Link pitch	mm	190
Shoe width, triple grouser	mm	600 / 700 / 800 / 900
Bottom rollers		2 x 9
Top rollers		2 x 2

		EC260F NL
Track shoe		2 x 51
Link pitch	mm	190
Shoe width, triple grouser	mm	600 / 700 / 800 / 900
Bottom rollers		2 x 9
Top rollers		2 x 2

Swing system		
The swing system uses an axial piston motors, driving a planetary gearbox for maximum torque. An automatic holding brake and antirebound valve are standard.		
Max. slew speed	r/min	11.7
Max. slew torque	kNm	91.7

Travel System		
Each track is powered by an automatic two-speed shift travel motor. The track brakes are multi-disc, spring-applied and hydraulic released. The travel motor, brake and planetary gears are well protected within the track frame.		
Max. drawbar pull	kN	217
Max. travel speed (low)	km/h	3.5
Max. travel speed (high)	km/h	5.5
Gradeability	°	35

Cab

The operator's cab has easy access via a wide door opening. The cab is supported on hydraulic dampening mounts to reduce shock and vibration levels. These along with sound absorbing lining provide low noise levels. The cab has excellent all-round visibility. The front windshield can easily slide up into the ceiling, and the lower front glass can be removed and stored in the side door.
Integrated air-conditioning and heating system: The pressurized and filtered cab air is supplied by an automaticallycontrolled fan. The air is distributed throughout the cab from 14 vents.
Ergonomic operator's seat: The adjustable seat and joystick console move independently to accommodate the operator. The seat has 12 different adjustments plus a seat belt for the operator's comfort and safety.

Sound Level		
Sound level in cab according to ISO 6396		
L_{pA}	dB	70
External sound level according to ISO 6395, EU Noise Directive (2000/14/EC)		
L_{WA}	dB	104

Service Refill		
Fuel tank	l	440
DEF/AdBlue® tank	l	50
Hydraulic system, total	l	385
Hydraulic tank	l	215
Engine oil	l	30
Engine coolant	l	44
Slew reduction unit	l	5.9
Travel reduction unit	l	2 x 5.0

Hydraulic system

The new electro-hydraulic system and new MCV (main control valve) use intelligent technology to control on-demand flow for highproductivity, high-digging capacity and excellent fuel consumption.
The following important functions are included in the system:
Summation system: Combines the flow of both hydraulic pumps to ensure quick cycle times and high productivity.
Boom priority: Gives priority to the boom operation for faster raising when loading or performing deep excavations.
Arm priority: Gives priority to the arm operation for faster cycle times in leveling and for increased bucket filling when digging.
Swing priority: Gives priority to swing functions for faster simultaneous operations.
Regeneration system: Prevents cavitation and provides flow to other movements during simultaneous operations for maximum productivity.
Holding valves: Boom and arm holding valves prevent the digging equipment from creeping.
Power boost: All digging and lifting forces are increased.

Main pump: 2 x Variable displacement axial piston pumps		
Maximum flow	l/min	2 x 240
Pilot pump: Gear pump		
Maximum flow	l/min	20.3
Max. pressure		
Implement	MPa	33.3 / 36.3
Travel circuit	MPa	36.3
Slew circuit	MPa	27.9
Pilot circuit	MPa	3.9

Hydraulic Cylinders		
Boom		2
Bore x Stroke	ø x mm	135 x 1 345
2 piece boom		1
Bore x Stroke	ø x mm	160 x 1 230
Arm		1
Bore x Stroke	ø x mm	140 x 1 665
Bucket		1
Bore x Stroke	ø x mm	130 x 1 150
Bucket for LR boom		1
Bore x Stroke	ø x mm	100 x 865

Specifications

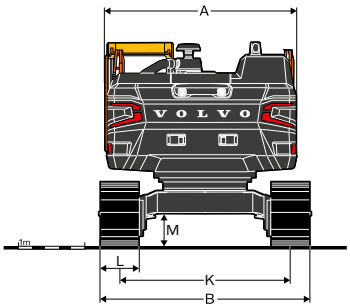

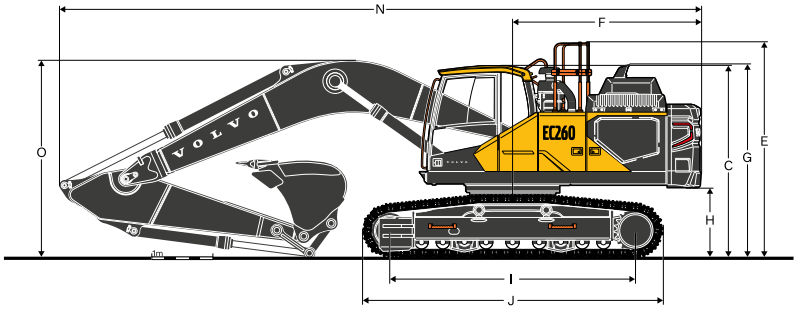

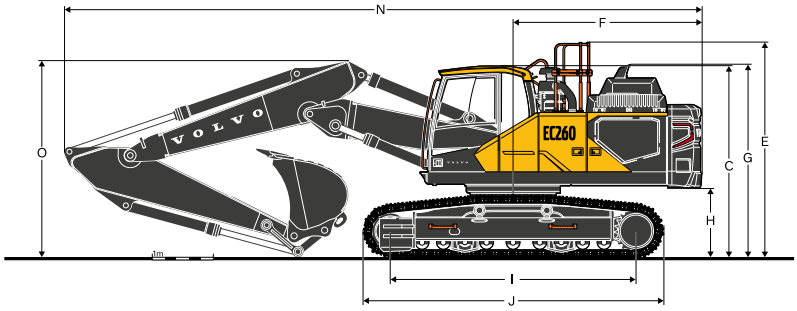

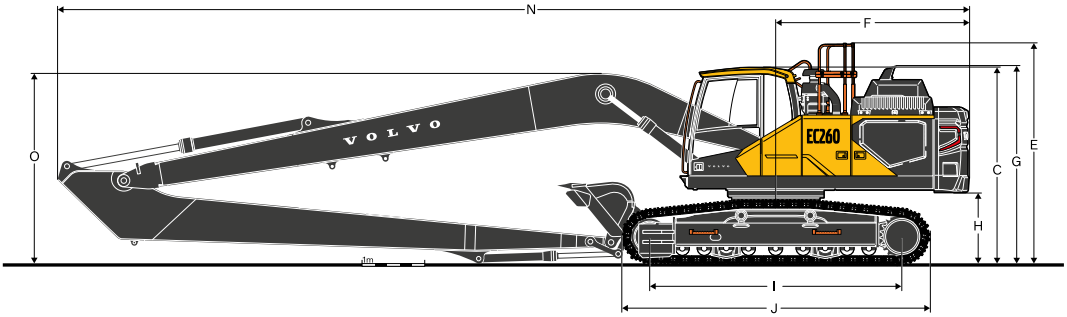

DIMENSIONS

	Unit	EC260F L					
Boom	**m**	**6.0**			**2 piece boom 5.95**		
Arm	**m**	**2.5**	**2.97**	**3.6**	**2.5**	**2.97**	**3.6**
A. Overall width of upper structure	mm	2 890	2 890	2 890	2 890	2 890	2 890
B. Overall width	mm	3 190	3 190	3 190	3 190	3 190	3 190
C. Overall height of cab	mm	3 040	3 040	3 040	3 040	3 040	3 040
D. Overall height of handrail	mm	3 145	3 145	3 145	3 145	3 145	3 145
E. Overall height of guardrail	mm	3 410	3 410	3 410	3 410	3 410	3 410
F. Tail swing radius	mm	3 080	3 080	3 080	3 080	3 080	3 080
G. Overall height of engine hood	mm	2 855	2 855	2 855	2 855	2 855	2 855
H. Counterweight clearance *	mm	1 045	1 045	1 045	1 045	1 045	1 045
I. Tumbler length	mm	3 850	3 850	3 850	3 850	3 850	3 850
J. Track length	mm	4 650	4 650	4 650	4 650	4 650	4 650
K. Track gauge	mm	2 590	2 590	2 590	2 590	2 590	2 590
L. Shoe width	mm	600	600	600	600	600	600
M. Min. ground clearance *	mm	470	470	470	470	470	470
N. Overall length	mm	10 295	10 215	10 280	10 245	10 215	10 215
O. Overall height of boom	mm	3 325	3 110	3 330	3 265	3 185	3 405

* Without shoe grouser

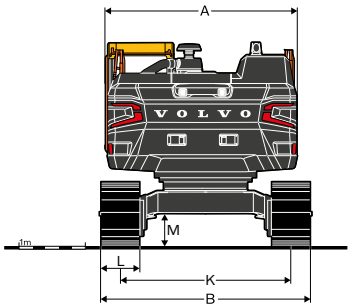

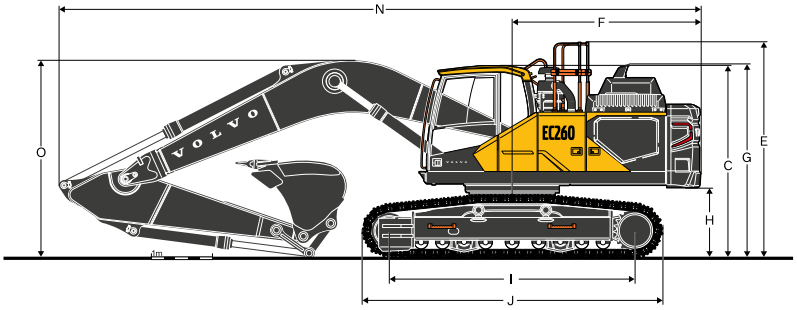

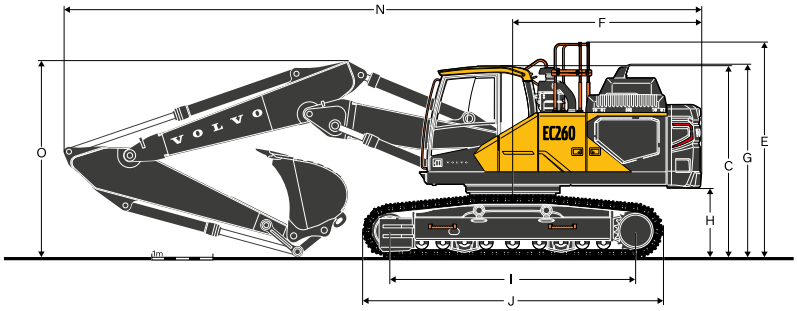

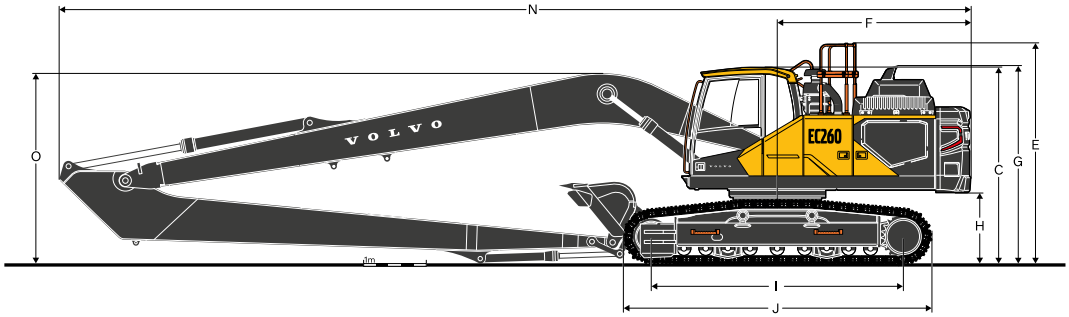

DIMENSIONS

	Unit	EC260F NL			EC260F LR
Boom	**m**	**6.0**			**10.2**
Arm	**m**	**2.5**	**2.97**	**3.6**	**7.85**
A. Overall width of upper structure	mm	2 890	2 890	2 890	2 890
B. Overall width	mm	2 990	2 990	2 990	3 190
C. Overall height of cab	mm	3 040	3 040	3 040	3 040
D. Overall height of handrail	mm	3 145	3 145	3 145	3 145
E. Overall height of guardrail	mm	3 410	3 410	3 410	3 410
F. Tail swing radius	mm	3 080	3 080	3 080	3 155
G. Overall height of engine hood	mm	2 855	2 855	2 855	2 855
H. Counterweight clearance *	mm	1 045	1 045	1 045	1 045
I. Tumbler length	mm	3 850	3 850	3 850	3 850
J. Track length	mm	4 650	4 650	4 650	4 650
K. Track gauge	mm	2 390	2 390	2 390	2 590
L. Shoe width	mm	600	600	600	600
M. Min. ground clearance *	mm	470	470	470	470
N. Overall length	mm	10 295	10 215	10 280	14 515
O. Overall height of boom	mm	3 325	3 110	3 330	3 065

* Without shoe grouser

Specifications

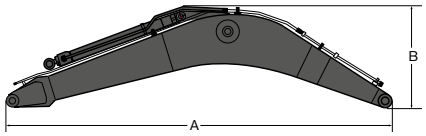

DIMENSIONS

Description	Unit	Boom			
	m	6.0 GP	6.0 HD	5.95 2-piece	10.2 LR
A. Length	mm	6 205	6 205	6 155	10 405
B. Height	mm	1 695	1 695	1 595	1 505
Width	mm	725	725	725	725
Weight	kg	2 255	2 380	2 840	3 070

* Includes arm cylinder, piping and pin

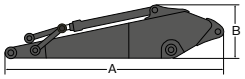

DIMENSIONS

Description	Unit	Arm				
	m	2.5 HD	2.97 GP	2.97 HD	3.6 GP	7.85 LR
A. Length	mm	3 585	4 055	4 055	4 725	8 965
B. Height	mm	975	975	975	970	1 205
Width	mm	510	510	510	510	385
Weight	kg	1 290	1 325	1 380	1 440	1 725

* Includes cylinder, linkage and pin

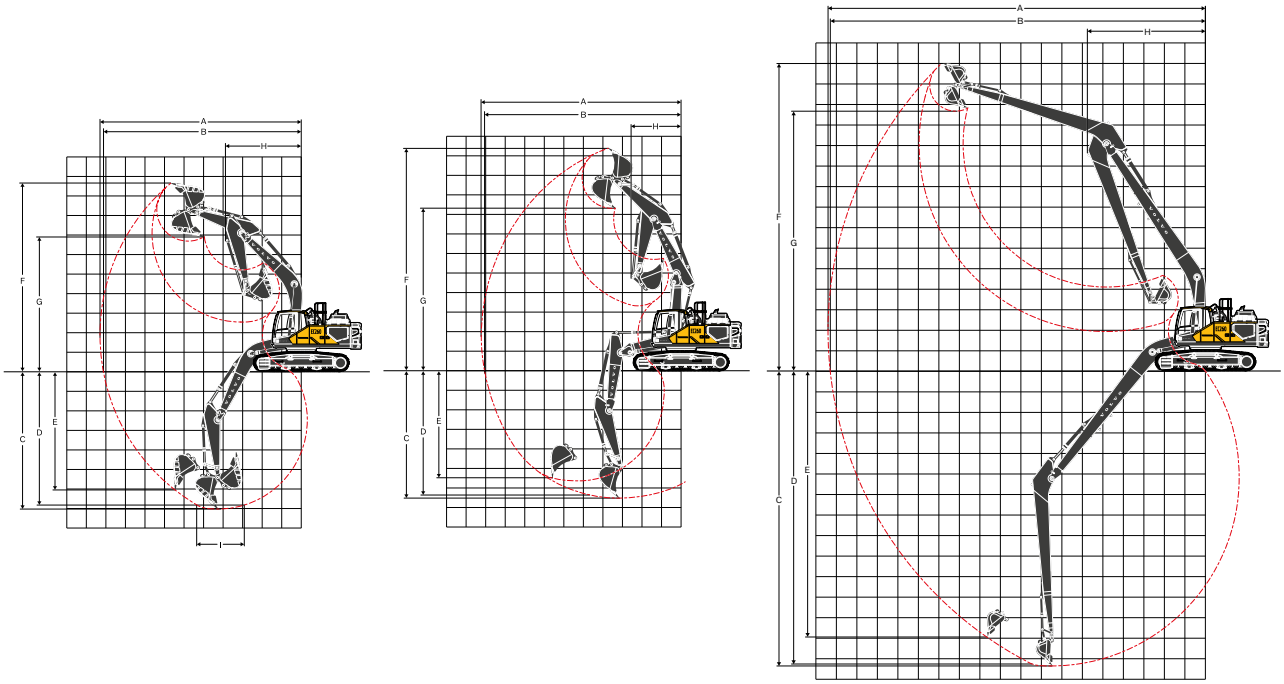

WORKING RANGES WITH DIRECT FIT BUCKET									
Description			**Unit**	**EC260F L, NL**					**EC260F LR**
Boom			**m**	**6.0**			**2 piece boom 5.95**		**10.2**
Arm			**m**	**2.5**	**2.97**	**3.6**	**2.5**	**2.97**	**3.6**	**7.85**
A. Max. digging reach			mm	9 960	10 340	10 810	9 970	10 365	10 855	18 305
B. Max. digging reach on ground			mm	9 775	10 160	10 640	9 785	10 190	10 685	18 210
C. Max. digging depth			mm	6 590	7 060	7 690	6 125	6 565	7 135	14 350
D. Max.digging depth (I=(2.44 m level)			mm	6 375	6 855	7 470	6 020	6 465	7 040	14 240
E. Max. vertical wall digging depth			mm	5 265	5 520	5 805	4 910	5 290	5 765	12 470
F. Max. cutting height			mm	9 620	9 685	9 645	11 140	11 390	11 625	14 890
G. Max. dumping height			mm	6 610	6 710	6 730	7 925	8 190	8 445	12 580
H. Min. front swing radius			mm	3 915	3 890	3 890	2 785	2 550	2 715	5 720
DIGGING FORCES WITH DIRECT FIT BUCKET										
Breakout force (bucket)	Normal	SAE J1179	kN	145	145	145	145	145	145	68
	Power boost	SAE J1179	kN	157	157	157	157	157	157	68
	Normal	ISO 6015	kN	166	166	166	166	166	166	77
	Power boost	ISO 6015	kN	181	181	181	181	181	181	77
Tearout force (arm)	Normal	SAE J1179	kN	132	114	102	132	114	102	43
	Power boost	SAE J1179	kN	143	124	111	143	124	111	43
	Normal	ISO 6015	kN	136	118	105	136	118	105	43
	Power boost	ISO 6015	kN	148	128	114	148	128	114	43
Rotation angle, bucket			°	177	177	177	177	177	177	178

Specifications

GROUND PRESSURE

EC260F L

Description	Shoe width	Operating weight	Ground pressure	Overall width	Operating weight	Ground pressure	Overall width
	mm	kg	kPa	mm	kg	kPa	mm
Triple grouser	600	26 720	51.5	3 190	26 900	51.9	3 190
	600 (HD)	26 960	52.0	3 190	27 140	52.4	3 190
	700	27 010	44.7	3 290	27 190	45.0	3 290
	800	27 300	39.5	3 390	27 480	39.8	3 390
	900	27 600	35.5	3 490	27 780	35.7	3 490
Double grouser	600	26 940	52.0	3 190	27 120	52.3	3 190
	700	27 280	45.1	3 290	27 460	45.4	3 290
Single grouser	600	26 750	51.6	3 340	26 930	44.5	3 340
		EC260F L, 6.0 m GP boom, 2.97 m GP arm, 1 179 kg bucket, 4 950 kg counterweight			**EC260F L, 6.0 m HD boom, 2.97 m HD arm, 1 179 kg bucket, 4 950 kg counterweight**		
Description	**Shoe width**	**Operating weight**	**Ground pressure**	**Overall width**	**Operating weight**	**Ground pressure**	**Overall width**
	mm	**kg**	**kPa**	**mm**	**kg**	**kPa**	**mm**
Triple grouser	600	27 310	52.7	3 190	27 360	52.8	3 190
	600 (HD)	27 550	53.2	3 190	27 600	53.2	3 190
	700	27 600	45.6	3 290	27 650	45.7	3 290
	800	27 890	40.4	3 390	27 940	40.4	3 390
	900	28 190	36.3	3 490	28 240	36.3	3 490
Double grouser	600	27 530	53.1	3 190	27 580	53.2	3 190
	700	27 870	46.1	3 290	27 920	46.2	3 290
Single grouser	600	27 340	45.2	3 340	27 390	45.3	3 340
		EC260F L, 5.95 m 2-pieces boom, 2.97 m GP arm, 1 179 kg bucket, 4 950 kg counterweight			**EC260F L, 5.95 m 2-pieces boom, 2.97 m HD arm, 1 179 kg bucket, 4 950 kg counterweight**		

EC260F NL

Description	Shoe width	Operating weight	Ground pressure	Overall width	Operating weight	Ground pressure	Overall width
	mm	kg	kPa	mm	kg	kPa	mm
Triple grouser	600	26 640	51.4	2 990	26 820	51.7	2 990
	600 (HD)	26 880	51.9	2 990	27 060	52.5	2 990
	700	26 930	44.5	3 090	27 110	44.8	3 090
	800	27 220	39.4	3 190	27 400	39.6	3 190
	900	27 520	35.4	3 290	27 700	35.6	3 290
Double grouser	600	26 860	51.8	2 990	27 040	52.2	2 990
	700	27 200	45.0	3 090	27 380	45.3	3 090
Single grouser	600	26 670	51.5	3 090	26 850	51.8	3 090
		EC260F NL, 6.0 m GP boom, 2.97 m GP arm, 1 179 kg bucket, 4 950 kg counterweight			**EC260F NL, 6.0 m HD boom, 2.97 m HD arm, 1 179 kg bucket, 4 950 kg counterweight**		
Description	**Shoe width**	**Operating weight**	**Ground pressure**	**Overall width**	**Operating weight**	**Ground pressure**	**Overall width**
	mm	**kg**	**kPa**	**mm**	**kg**	**kPa**	**mm**
Triple grouser	600	27 230	52.5	2 990	27 280	52.6	2 990
	600 (HD)	27 470	53.0	2 990	27 520	53.1	2 990
	700	27 520	45.5	3 090	27 570	45.6	3 090
	800	27 810	40.2	3 190	27 860	40.3	3 190
	900	28 110	36.2	3 290	28 160	36.2	3 290
Double grouser	600	27 450	53.0	2 990	27 500	53.1	2 990
	700	27 790	46.0	3 090	27 840	46.0	3 090
Single grouser	600	27 260	52.6	3 090	27 310	52.7	3 090
		EC260F NL, 5.95 m 2-pieces boom, 2.97 m GP arm, 1 179 kg bucket, 4 950 kg counterweight			**EC260F NL, 5.95 m 2-pieces boom, 2.97 m HD arm, 1 179 kg bucket, 4 950 kg counterweight**		

EC260F LR

Description	Shoe width	Operating weight	Ground pressure	Overall width
	mm	kg	kPa	mm
Triple grouser	600	28 460	54.9	3 190
	600 (HD)	28 700	55.4	3 190
	700	28 750	47.5	3 290
	800	29 040	42.0	3 390
	900	29 340	37.7	3 490
		EC260F LR, 10.2 m LR boom, 7.85 m LR arm, 452 kg bucket, 6 200 kg counterweight		

BUCKET SELECTION GUIDE

EC260F L with 600 mm shoe, 4 950 kg counterweight

Bucket Type		Capacity	Cutting width	Weight	Teeth	Recommended maximum material density (kg/m³)					
						6.0 m GP Boom			5.95 m 2-piece Boom		
		L	mm	kg	EA	2.5 m	2.97 m	3.6 m	2.5 m	2.97 m	3.6 m
Direct fit bucket	General purpose	560	600	800	3	C	C	C	C	C	C
		620	750	823	3	C	C	C	C	C	C
		770	900	983	4	C	C	C	C	C	C
		950	1 090	1 012	4	C	C	C	C	C	C
		1 140	1 240	1 179	5	C	C	C	C	C	C
		1 320	1 390	1 196	5	C	C	C	C	C	C
		1 450	1 490	1 249	5	C	C	C	C	C	C
		1 510	1 540	1 294	5	C	C	C	C	C	C
		1 760	1 740	1 435	6	C	B	B	C	B	A
	Heavy duty	560	600	870	3	D	D	D	D	D	D
		620	750	880	3	D	D	D	D	D	D
		1 140	1 240	1 200	5	D	D	D	D	D	D
		1 320	1 390	1 289	5	D	D	D	D	D	D
		1 510	1 540	1 377	5	D	D	C	D	D	B
		1 760	1 740	1 533	6	C	B	A	B	B	A
Direct fit bucket (UQC interface)	General purpose	560	600	800	3	C	C	C	C	C	C
		620	750	823	3	C	C	C	C	C	C
		770	900	983	4	C	C	C	C	C	C
		950	1 090	1 012	4	C	C	C	C	C	C
		1 140	1 240	1 179	5	C	C	C	C	C	C
		1 320	1 390	1 196	5	C	C	C	C	C	B
		1 450	1 490	1 249	5	C	C	B	C	B	B
		1 510	1 540	1 294	5	C	B	A	C	B	A
		1 760	1 740	1 435	6	B	A	x	B	A	x
	Heavy duty	560	600	870	3	D	D	D	D	D	D
		620	750	880	3	D	D	D	D	D	D
		1 140	1 240	1 200	5	D	D	D	D	D	C
		1 320	1 390	1 289	5	D	C	B	D	C	B
		1 510	1 540	1 377	5	C	B	A	C	B	A
		1 760	1 740	1 533	6	B	A	x	A	A	x

For long reach boom and arm configuration, Volvo recommends to use 0.52 m³ bucket
Please consult with your Volvo dealer for the proper match of buckets and attachments to suit the application.
The recommendations are given as a guide only, based on typical operation conditions.
Bucket capacity based on ISO 7451, heaped material with a 1:1 angle of repose.

Maximum material density
D: > 1 900 kg/m³: Wet mud, Iron ore
C: 1 700 ~ 1 800 kg/m³: Granite, Wet sand, Well blasted rock
B: 1 400 ~ 1 600 kg/m³: Wet earth and clay, Limestone, Sandstone
A: 1 200 ~ 1 300 kg/m³: Coal, Caliche, Shale
X : Not recommended

Specifications

BUCKET SELECTION GUIDE

EC260F NL with 600 mm shoe, 4 950 kg counterweight

Bucket Type		Capacity	Cutting width	Weight	Teeth	Recommended maximum material density (kg/m³)					
						6.0 m GP Boom			5.95 m 2-piece Boom		
		L	mm	kg	EA	2.5 m	2.97 m	3.6 m	2.5 m	2.97 m	3.6 m
Direct fit bucket	General purpose	560	600	800	3	C	C	C	C	C	C
		620	750	823	3	C	C	C	C	C	C
		770	900	983	4	C	C	C	C	C	C
		950	1 090	1 012	4	C	C	C	C	C	C
		1 140	1 240	1 179	5	C	C	C	C	C	C
		1 320	1 390	1 196	5	C	C	C	C	C	C
		1 450	1 490	1 249	5	C	C	B	C	C	B
		1 510	1 540	1 294	5	C	C	B	C	C	B
		1 760	1 740	1 435	6	B	B	A	B	A	X
	Heavy duty	560	600	870	3	D	D	D	D	D	D
		620	750	880	3	D	D	D	D	D	D
		1 140	1 240	1 200	5	D	D	D	D	D	D
		1 320	1 390	1 289	5	D	D	C	D	D	C
		1 510	1 540	1 377	5	C	C	B	C	B	B
		1 760	1 740	1 533	6	B	A	B	B	A	X
Direct fit bucket (UQC interface)	General purpose	560	600	800	3	C	C	C	C	C	C
		620	750	823	3	C	C	C	C	C	C
		770	900	983	4	C	C	C	C	C	C
		950	1 090	1 012	4	C	C	C	C	C	C
		1 140	1 240	1 179	5	C	C	B	C	C	B
		1 320	1 390	1 196	5	C	B	B	C	B	A
		1 450	1 490	1 249	5	B	B	A	B	B	x
		1 510	1 540	1 294	5	B	B	x	B	A	x
		1 760	1 740	1 435	6	A	x	x	A	x	x
	Heavy duty	560	600	870	3	D	D	D	D	D	D
		620	750	880	3	D	D	D	D	D	D
		1 140	1 240	1 200	5	D	D	B	D	C	B
		1 320	1 390	1 289	5	C	B	A	C	B	A
		1 510	1 540	1 377	5	B	A	x	B	A	x
		1 760	1 740	1 533	6	A	x	x	A	x	x

For long reach boom and arm configuration, Volvo recommends to use 0.52 m³ bucket
Please consult with your Volvo dealer for the proper match of buckets and attachments to suit the application.
The recommendations are given as a guide only, based on typical operation conditions.
Bucket capacity based on ISO 7451, heaped material with a 1:1 angle of repose.

Maximum material density
D: > 1 900 kg/m³: Wet mud, Iron ore
C: 1 700 ~ 1 800 kg/m³: Granite, Wet sand, Well blasted rock
B: 1 400 ~ 1 600 kg/m³: Wet earth and clay, Limestone, Sandstone
A: 1 200 ~ 1 300 kg/m³: Coal, Caliche, Shale
X : Not recommended

LIFTING CAPACITY EC260F L

Lifting capacity at the arm end without bucket.
For lifting capacity including bucket, simply subtract actual weight of the direct fit bucket or the bucket with quick coupler from the following values.

	Lifting hook related to ground level		1.5 m		3.0 m		4.5 m		6.0 m		7.5 m		9.0 m		Max. reach		Max.
			Along UC	Across UC	Along UC	Across UC	Along UC	Across UC	Along UC	Across UC	Along UC	Across UC	Along UC	Across UC	Along UC	Across UC	m
Boom : 6.0 m GP Arm : 2.5 m HD Shoe : 600 mm CWT : 4 950 kg	7.5 m	kg							*6 820	*6 820					*6 880	*6 880	6.1 m
	6.0 m	kg							*6 830	*6 830					*6 880	5 510	7.22 m
	4.5 m	kg					*9 220	*9 220	*7 670	7 210	*7 050	5 120			6 930	4 700	7.9 m
	3.0 m	kg					*11 920	10 440	*8 880	6 890	7 400	4 980			6 380	4 310	8.25 m
	1.5 m	kg					*14 020	9 880	*10 020	6 600	7 240	4 830			6 210	4 170	8.32 m
	0 m	kg					*14 810	9 660	9 920	6 420	7 130	4 740			6 390	4 270	8.11 m
	-1.5 m	kg			*10 450	*10 450	*14 620	9 650	9 860	6 370	7 120	4 720			7 000	4 650	7.59 m
	-3.0 m	kg			*18 680	*18 680	*13 530	9 770	9 950	6 440					8 460	5 570	6.7 m
	-4.5 m	kg			*14 950	*14 950	*10 900	10 080							*9 090	8 080	5.24 m
Boom : 6.0 m GP Arm : 2.97 m GP Shoe : 600 mm CWT : 4 950 kg	7.5 m	kg													*6 070	*6 070	6.61 m
	6.0 m	kg							*6 240	*6 240	*6 320	5 260			*5 820	5 080	7.66 m
	4.5 m	kg					*8 320	*8 320	*7 140	*7 140	*6 610	5 170			*5 840	4 390	8.3 m
	3.0 m	kg					*11 040	10 650	*8 410	6 970	*7 210	5 020			5 980	4 040	8.64 m
	1.5 m	kg					*13 410	10 010	*9 660	6 650	7 260	4 850			5 820	3 910	8.7 m
	0 m	kg			*5 010	*5 010	*14 610	9 690	9 940	6 440	7 130	4 730			5 960	3 990	8.5 m
	-1.5 m	kg	*6 650	*6 650	*10 690	*10 690	*14 760	9 610	9 840	6 340	7 080	4 680			6 460	4 300	8.01 m
	-3.0 m	kg	*12 340	*12 340	*17 770	*17 770	*14 010	9 690	9 870	6 370					7 610	5 030	7.17 m
	-4.5 m	kg			*16 720	*16 720	*11 990	9 930							*8 930	6 840	5.83 m
Boom : 6.0 m GP Arm : 3.6 m GP Shoe : 600 mm CWT : 4 950 kg	7.5 m	kg													*5 030	*5 030	7.23 m
	6.0 m	kg									*5 580	5 350			*4 890	4 610	8.19 m
	4.5 m	kg							*6 350	*6 350	*5 990	5 230			*4 940	4 030	8.8 m
	3.0 m	kg			*15 600	*15 600	*9 740	*9 740	*7 670	7 060	*6 680	5 050	5 620	3 800	*5 160	3 720	9.11 m
	1.5 m	kg					*12 390	10 140	*9 050	6 690	7 270	4 860	5 520	3 710	5 370	3 600	9.17 m
	0 m	kg			*7 070	*7 070	*14 070	9 690	9 940	6 420	7 100	4 700			5 460	3 640	8.98 m
	-1.5 m	kg	*6 790	*6 790	*10 790	*10 790	*14 670	9 510	9 770	6 280	7 010	4 610			5 850	3 880	8.52 m
	-3.0 m	kg	*11 020	*11 020	*15 980	*15 980	*14 360	9 520	9 750	6 260	7 010	4 620			6 720	4 440	7.74 m
	-4.5 m	kg	*16 330	*16 330	*18 570	*18 570	*12 970	9 690	*9 580	6 380					*8 590	5 700	6.52 m
	-6.0 m	kg					*9 450	*9 450							*9 400	*9 400	4.52 m
Boom : 6.0 m HD Arm : 2.5 m HD Shoe : 800 mm CWT : 4 950 kg	7.5 m	kg							*6 800	*6 800					*6 850	*6 850	6.1 m
	6.0 m	kg							*6 810	*6 810					*6 840	5 590	7.22 m
	4.5 m	kg					*9 190	*9 190	*7 640	7 320	*7 010	5 190			*6 980	4 770	7.9 m
	3.0 m	kg					*11 860	10 590	*8 840	6 990	7 520	5 050			6 480	4 360	8.25 m
	1.5 m	kg					*13 950	10 010	*9 970	6 690	7 360	4 900			6 310	4 230	8.32 m
	0 m	kg					*14 730	9 780	10 080	6 500	7 250	4 800			6 490	4 320	8.11 m
	-1.5 m	kg			*10 450	*10 450	*14 530	9 770	10 020	6 450	7 230	4 780			7 110	4 710	7.59 m
	-3.0 m	kg			*18 560	*18 560	*13 450	9 890	*10 070	6 520					8 600	5 640	6.7 m
	-4.5 m	kg			*14 850	*14 850	*10 830	10 210							*9 030	8 190	5.24 m
Boom : 6.0 m HD Arm : 2.97 m HD Shoe : 800 mm CWT : 4 950 kg	7.5 m	kg													*6 060	*6 060	6.61 m
	6.0 m	kg							*6 190	*6 190	*6 260	5 320			*5 810	5 130	7.66 m
	4.5 m	kg					*8 260	*8 260	*7 070	*7 070	*6 540	5 220			*5 830	4 430	8.3 m
	3.0 m	kg					*10 940	10 760	*8 320	7 040	*7 140	5 060			6 050	4 070	8.64 m
	1.5 m	kg					*13 280	10 090	*9 560	6 700	7 350	4 890			5 890	3 940	8.7 m
	0 m	kg			*5 000	*5 000	*14 470	9 750	10 060	6 480	7 210	4 760			6 030	4 010	8.5 m
	-1.5 m	kg	*6 640	*6 640	*10 680	*10 680	*14 610	9 670	9 950	6 380	7 160	4 710			6 530	4 320	8.01 m
	-3.0 m	kg	*12 340	*12 340	*17 760	*17 760	*13 870	9 750	9 990	6 410					7 700	5 060	7.17 m
	-4.5 m	kg			*16 540	*16 540	*11 860	10 000							*8 830	6 890	5.83 m
Boom : 6.0 m HD Arm : 3.6 m GP Shoe : 800 mm CWT : 4 950 kg	7.5 m	kg													*5 030	*5 030	7.23 m
	6.0 m	kg									*5 550	5 440			*4 890	4 680	8.19 m
	4.5 m	kg							*6 320	*6 320	*5 970	5 310			*4 940	4 090	8.8 m
	3.0 m	kg			*15 540	*15 540	*9 700	*9 700	*7 640	7 170	*6 650	5 130	*5 640	3 850	*5 160	3 780	9.11 m
	1.5 m	kg					*12 330	10 290	*9 000	6 790	7 400	4 930	5 620	3 760	5 460	3 650	9.17 m
	0 m	kg			*7 070	*7 070	*13 990	9 810	*10 080	6 510	7 220	4 770			5 550	3 690	8.98 m
	-1.5 m	kg	*6 790	*6 790	*10 790	*10 790	*14 590	9 630	9 930	6 360	7 120	4 670			5 950	3 940	8.52 m
	-3.0 m	kg	*11 020	*11 020	*15 980	*15 980	*14 270	9 640	9 900	6 330	7 130	4 680			6 830	4 490	7.74 m
	-4.5 m	kg	*16 330	*16 330	*18 450	*18 450	*12 890	9 810	*9 520	6 460					*8 530	5 770	6.52 m
	-6.0 m	kg					*9 380	*9 380							*9 330	*9 330	4.52 m

Notes: 1. Machine in “Fine Mode-F” (Power Boost) for lifting capacities. 2. The above loads are in compliance with SAE J1097 and ISO 10567 Hydraulic Excavator Lifting Capacity Standards. 3. Rated loads do not exceed 87% of hydraulic lifting capacity or 75% of tipping load. 4. Rated loads marked with an asterisk (*) are limited by hydraulic capacity rather than tipping load.

Specifications

LIFTING CAPACITY EC260F L

Lifting capacity at the arm end without bucket.
For lifting capacity including bucket, simply subtract actual weight of the direct fit bucket or the bucket with quick coupler from the following values.

	Lifting hook related to ground level		1.5 m		3.0 m		4.5 m		6.0 m		7.5 m		9.0 m		Max. reach		Max.
			Along UC	Across UC	Along UC	Across UC	Along UC	Across UC	Along UC	Across UC	Along UC	Across UC	Along UC	Across UC	Along UC	Across UC	m
Boom : 5.95 m VA Arm : 2.5 m HD Shoe : 600 mm CWT : 4 950 kg	9 m	kg													*9 650	*9 650	4.21 m
	7.5 m	kg					*9 820	*9 820	*8 590	7 460					*8 050	7 210	6.12 m
	6 m	kg					*10 070	*10 070	*9 010	7 430					*7 540	5 440	7.24 m
	4.5 m	kg					*12 120	11 200	*9 600	7 180	7 540	5 070			6 890	4 630	7.92 m
	3 m	kg					*13 950	10 380	*10 350	6 840	7 380	4 930			6 340	4 240	8.27 m
	1.5 m	kg					*14 780	9 780	10 110	6 530	7 220	4 780			6 180	4 110	8.33 m
	0 m	kg					*14 160	9 560	9 900	6 350	7 120	4 680			6 360	4 210	8.12 m
	-1.5 m	kg			*10 250	*10 250	*12 490	9 560	*9 680	6 300	*7 110	4 680			*6 880	4 610	7.6 m
	-3 m	kg					*9 720	9 710	*7 460	6 400					*6 000	5 530	6.72 m
Boom : 5.95 m VA Arm : 2.97 m HD Shoe : 600 mm CWT : 4 950 kg	9 m	kg					*7 850	*7 850							*6 890	*6 890	4.96 m
	7.5 m	kg					*7 800	*7 800	*7 470	*7 470					*5 980	*5 980	6.65 m
	6 m	kg					*7 980	*7 980	*8 300	7 530	*6 480	5 200			*5 670	4 970	7.69 m
	4.5 m	kg			*16 190	*16 190	*11 380	*11 380	*9 170	7 260	7 590	5 110			*5 640	4 290	8.33 m
	3 m	kg					*13 340	10 560	*10 020	6 890	7 400	4 940			*5 820	3 940	8.66 m
	1.5 m	kg					*14 580	9 870	10 140	6 550	7 210	4 770			5 750	3 820	8.73 m
	0 m	kg					*14 450	9 530	9 880	6 320	7 080	4 640			5 890	3 890	8.52 m
	-1.5 m	kg			*10 500	*10 500	*13 150	9 460	9 780	6 230	7 030	4 600			6 390	4 210	8.04 m
	-3 m	kg					*10 750	9 560	*8 260	6 280					*6 100	4 940	7.2 m
Boom : 5.95 m VA Arm : 3.6 m GP Shoe : 600 mm CWT : 4 950 kg	9 m	kg													*5 500	*5 500	5.79 m
	7.5 m	kg							*6 450	*6 450					*4 950	*4 950	7.28 m
	6 m	kg							*6 820	*6 820	*6 270	5 330			*4 770	4 520	8.24 m
	4.5 m	kg			*7 570	*7 570	*8 150	*8 150	*8 070	7 420	*7 360	5 200			*4 780	3 950	8.84 m
	3 m	kg					*12 460	10 880	*9 540	7 030	7 490	5 010	5 610	3 750	*4 960	3 650	9.16 m
	1.5 m	kg					*14 150	10 070	10 240	6 640	7 260	4 810	5 510	3 660	5 310	3 530	9.22 m
	0 m	kg			*6 880	*6 880	*14 610	9 590	9 920	6 350	7 090	4 650	5 430	3 590	5 410	3 570	9.03 m
	-1.5 m	kg			*10 630	*10 630	*13 840	9 410	9 750	6 200	6 990	4 560			5 800	3 810	8.57 m
	-3 m	kg			*15 800	*15 800	*11 960	9 440	*9 100	6 200	*6 720	4 580			*6 200	4 360	7.79 m
	-4.5 m	kg					*8 690	*8 690	*6 430	6 350							6.59 m

Notes: 1. Machine in “Fine Mode-F” (Power Boost) for lifting capacities. 2. The above loads are in compliance with SAE J1097 and ISO 10567 Hydraulic Excavator Lifting Capacity Standards. 3. Rated loads do not exceed 87% of hydraulic lifting capacity or 75% of tipping load. 4. Rated loads marked with an asterisk (*) are limited by hydraulic capacity rather than tipping load.

LIFTING CAPACITY EC260F NL

Lifting capacity at the arm end without bucket.
For lifting capacity including bucket, simply subtract actual weight of the direct fit bucket or the bucket with quick coupler from the following values.

	Lifting hook related to ground level		1.5 m		3.0 m		4.5 m		6.0 m		7.5 m		9.0 m		Max. reach		Max.
			Along UC	Across UC	Along UC	Across UC	Along UC	Across UC	Along UC	Across UC	Along UC	Across UC	Along UC	Across UC	Along UC	Across UC	m
Boom : 6.0 m GP Arm : 2.5 m HD Shoe : 600 mm CWT : 4 950 kg	7.5 m	kg							*6 820	*6 820					*6 880	6 720	6.1 m
	6.0 m	kg							*6 830	*6 830					*6 880	5 080	7.22 m
	4.5 m	kg					*9 220	*9 220	*7 670	6 640	*7 050	4 710			6 910	4 330	7.9 m
	3.0 m	kg					*11 920	9 500	*8 880	6 320	7 380	4 580			6 360	3 960	8.25 m
	1.5 m	kg					*14 020	8 960	*10 020	6 040	7 220	4 440			6 190	3 830	8.32 m
	0 m	kg					*14 810	8 750	9 890	5 860	7 110	4 340			6 370	3 910	8.11 m
	-1.5 m	kg			*10 450	*10 450	*14 620	8 730	9 830	5 810	7 100	4 330			6 980	4 260	7.59 m
	-3.0 m	kg			*18 680	17 300	*13 530	8 850	9 920	5 880					8 440	5 100	6.7 m
	-4.5 m	kg			*14 950	*14 950	*10 900	9 150							*9 090	7 380	5.24 m
Boom : 6.0 m GP Arm : 2.97 m HD Shoe : 600 mm CWT : 4 950 kg	7.5 m	kg													*6 070	5 990	6.61 m
	6.0 m	kg							*6 240	*6 240	*6 320	4 860			*5 820	4 690	7.66 m
	4.5 m	kg					*8 320	*8 320	*7 140	6 730	*6 610	4 770			*5 840	4 040	8.3 m
	3.0 m	kg					*11 040	9 700	*8 410	6 400	*7 210	4 620			5 960	3 710	8.64 m
	1.5 m	kg					*13 410	9 080	*9 660	6 090	7 240	4 460			5 810	3 590	8.7 m
	0 m	kg			*5 010	*5 010	*14 610	8 770	9 920	5 880	7 110	4 340			5 940	3 650	8.5 m
	-1.5 m	kg	*6 650	*6 650	*10 690	*10 690	*14 760	8 700	9 810	5 790	7 060	4 290			6 440	3 940	8.01 m
	-3.0 m	kg	*12 340	*12 340	*17 770	17 100	*14 010	8 770	9 850	5 820					7 590	4 600	7.17 m
	-4.5 m	kg			*16 720	*16 720	*11 990	9 000							*8 930	6 250	5.83 m
Boom : 6.0 m GP Arm : 3.6 m GP Shoe : 600 mm CWT : 4 950 kg	7.5 m	kg													*5 030	*5 030	7.23 m
	6.0 m	kg									*5 580	4 950			*4 890	4 250	8.19 m
	4.5 m	kg							*6 350	*6 350	*5 990	4 830			*4 940	3 710	8.8 m
	3.0 m	kg			*15 600	*15 600	*9 740	*9 740	*7 670	6 480	*6 680	4 650	5 610	3 490	*5 160	3 420	9.11 m
	1.5 m	kg					*12 390	9 210	*9 050	6 130	7 250	4 460	5 510	3 400	5 350	3 300	9.17 m
	0 m	kg			*7 070	*7 070	*14 070	8 770	9 910	5 860	7 080	4 300			5 450	3 340	8.98 m
	-1.5 m	kg	*6 790	*6 790	*10 790	*10 790	*14 670	8 590	9 750	5 720	6 990	4 220			5 830	3 550	8.52 m
	-3.0 m	kg	*11 020	*11 020	*15 980	*15 980	*14 360	8 600	9 720	5 700	6 990	4 220			6 700	4 060	7.74 m
	-4.5 m	kg	*16 330	*16 330	*18 570	17 100	*12 970	8 770	*9 580	5 820					*8 590	5 210	6.52 m
	-6.0 m	kg					*9 450	9 170							*9 400	9 110	4.52 m
Boom : 5.95 m VA Arm : 2.5 m HD Shoe : 600 mm CWT : 4 950 kg	9 m	kg													*9 650	*9 650	4.21 m
	7.5 m	kg					*9 820	*9 820	*8 590	6 870					*8 050	6 640	6.12 m
	6 m	kg					*10 070	*10 070	*9 010	6 840					*7 540	5 010	7.24 m
	4.5 m	kg					*12 120	10 220	*9 600	6 600	7 520	4 660			6 880	4 260	7.92 m
	3 m	kg					*13 950	9 430	*10 350	6 260	7 360	4 520			6 320	3 890	8.27 m
	1.5 m	kg					*14 780	8 850	10 080	5 960	7 200	4 370			6 160	3 760	8.33 m
	0 m	kg					*14 160	8 630	9 870	5 780	7 100	4 280			6 340	3 850	8.12 m
	-1.5 m	kg			*10 250	*10 250	*12 490	8 630	*9 680	5 740	7 100	4 280			*6 880	4 210	7.6 m
	-3 m	kg					*9 720	8 780	*7 460	5 840					*6 000	5 060	6.72 m
Boom : 5.95 m VA Arm : 2.97 m HD Shoe : 600 mm CWT : 4 950 kg	9 m	kg					*7 850	*7 850							*6 890	*6 890	4.96 m
	7.5 m	kg					*7 800	*7 800	*7 470	7 020					*5 980	5 870	6.65 m
	6 m	kg					*7 980	*7 980	*8 300	6 940	*6 480	4 780			*5 670	4 570	7.69 m
	4.5 m	kg			*16 190	*16 190	*11 380	10 420	*9 170	6 670	7 570	4 700			*5 640	3 940	8.33 m
	3 m	kg					*13 340	9 600	*10 020	6 310	7 380	4 530			*5 820	3 610	8.66 m
	1.5 m	kg					*14 580	8 920	10 110	5 980	7 190	4 360			5 730	3 490	8.73 m
	0 m	kg					*14 450	8 600	9 850	5 750	7 060	4 240			5 870	3 560	8.52 m
	-1.5 m	kg			*10 500	*10 500	*13 150	8 530	9 750	5 670	7 010	4 200			6 370	3 840	8.04 m
	-3 m	kg					*10 750	8 630	*8 260	5 720					*6 100	4 510	7.2 m
Boom : 5.95 m VA Arm : 3.6 m GP Shoe : 600 mm CWT : 4 950 kg	9 m	kg													*5 500	*5 500	5.79 m
	7.5 m	kg							*6 450	*6 450					*4 950	*4 950	7.28 m
	6 m	kg							*6 820	*6 820	*6 270	4 910			*4 770	4 160	8.24 m
	4.5 m	kg			*7 570	*7 570	*8 150	*8 150	*8 070	6 820	*7 360	4 790			*4 780	3 620	8.84 m
	3 m	kg					*12 460	9 910	*9 540	6 440	7 460	4 600	5 590	3 440	*4 960	3 340	9.16 m
	1.5 m	kg					*14 150	9 120	10 220	6 070	7 240	4 400	5 490	3 350	5 300	3 230	9.22 m
	0 m	kg			*6 880	*6 880	*14 610	8 650	9 890	5 780	7 070	4 240	5 410	3 280	5 390	3 260	9.03 m
	-1.5 m	kg			*10 630	*10 630	*13 840	8 480	9 720	5 640	6 970	4 160			5 780	3 480	8.57 m
	-3 m	kg			*15 800	*15 800	*11 960	8 510	*9 100	5 630	*6 720	4 180			*6 200	3 980	7.79 m
	-4.5 m	kg					*8 690	*8 690	*6 430	5 780							6.59 m

Notes: 1. Machine in “Fine Mode-F” (Power Boost) for lifting capacities. 2. The above loads are in compliance with SAE J1097 and ISO 10567 Hydraulic Excavator Lifting Capacity Standards. 3. Rated loads do not exceed 87% of hydraulic lifting capacity or 75% of tipping load. 4. Rated loads marked with an asterisk (*) are limited by hydraulic capacity rather than tipping load.

Specifications

LIFTING CAPACITY EC260F LR

Lifting capacity at the arm end without bucket.
For lifting capacity including bucket, simply subtract actual weight of the direct fit bucket or the bucket with quick coupler from the following values.

	Lifting hook related to ground level		0 m		1.5 m		3.0 m		4.5 m		6.0 m		7.5 m		9.0 m	
			Along UC	Across UC	Along UC	Across UC	Along UC	Across UC	Along UC	Across UC	Along UC	Across UC	Along UC	Across UC	Along UC	Across UC
Boom : 10.2 m LR Arm : 7.85 m LR Shoe : 800 mm CWT : 6 200 kg	13.5 m	kg														
	12.0 m	kg														
	10.5 m	kg														
	9.0 m	kg														
	7.5 m	kg														
	6.0 m	kg														
	4.5 m	kg														
	3.0 m	kg					*4 270	*4 270	*7 320	*7 320	*5 310	*5 310	*4 270	*4 270	*3 630	*3 630
	1.5 m	kg					*1 460	*1 460	*5 150	*5 150	*6 490	*6 490	*5 000	4 870	*4 120	3 760
	0 m	kg					*1 550	*1 550	*3 490	*3 490	*7 430	5 870	*5 640	4 410	*4 560	3 440
	-1.5 m	kg			*1 510	*1 510	*2 010	*2 010	*3 370	*3 370	*6 290	5 420	*6 130	4 060	*4 940	3 190
	-3.0 m	kg	*2 080	*2 080	*2 070	*2 070	*2 550	*2 550	*3 690	*3 690	*5 980	5 170	6 370	3 840	4 940	3 010
	-4.5 m	kg	*2 510	*2 510	*2 630	*2 630	*3 140	*3 140	*4 200	*4 200	*6 260	5 060	6 240	3 720	4 820	2 900
	-6.0 m	kg	*3 000	*3 000	*3 230	*3 230	*3 790	*3 790	*4 860	*4 860	*6 880	5 060	6 190	3 680	4 770	2 850
	-7.5 m	kg	*3 530	*3 530	*3 850	*3 850	*4 500	*4 500	*5 660	*5 660	*7 790	5 130	6 220	3 710	4 780	2 860
	-9.0 m	kg			*4 530	*4 530	*5 290	*5 290	*6 610	*6 610	*7 720	5 280	*6 200	3 800	4 850	2 920
	-10.5 m	kg					*6 190	*6 190	*7 790	*7 790	*6 970	5 500	*5 640	3 950	*4 660	3 050
	-12.0 m	kg							*7 370	*7 370	*5 830	5 810	*4 740	4 200	*3 840	3 260

	Lifting hook related to ground level		10.5 m		12.0 m		13.5 m		15 m		16.5 m		Max. reach		Max.
			Along UC	Across UC	Along UC	Across UC	Along UC	Across UC	Along UC	Across UC	Along UC	Across UC	Along UC	Across UC	m
Boom : 10.2 m LR Arm : 7.85 m LR Shoe : 800 mm CWT : 6 200 kg	13.5 m	kg											*1 090	*1 090	12.4 m
	12.0 m	kg					*1 160	*1 160					*1 030	*1 030	13.7 m
	10.5 m	kg					*1 740	*1 740					*990	*990	14.7 m
	9.0 m	kg					*2 100	*2 100	*1 360	*1 360			*980	*980	15.5 m
	7.5 m	kg			*2 280	*2 280	*2 250	*2 250	*1 790	*1 790			*970	*970	16.1 m
	6.0 m	kg			*2 450	*2 450	*2 370	2 300	*2 120	1 840	*1 010	*1 010	*990	*990	16.5 m
	4.5 m	kg	*2 870	*2 870	*2 670	*2 670	*2 520	2 190	*2 410	1 760	*1 370	*1 370	*1 010	*1 010	16.8 m
	3.0 m	kg	*3 200	*3 200	*2 900	2 570	*2 690	2 070	*2 530	1 680	*1 600	1 360	*1 050	*1 050	17.0 m
	1.5 m	kg	*3 540	2 980	*3 150	2 400	*2 870	1 950	2 580	1 600	*1 740	1 300	*1 110	*1 110	17.0 m
	0 m	kg	*3 870	2 760	*3 390	2 240	2 960	1 840	2 500	1 520	*1 750	1 250	*1 190	1 190	16.9 m
	-1.5 m	kg	4 140	2 570	3 410	2 100	2 860	1 740	2 430	1 450	*1 570	1 210	*1 290	1 190	16.7 m
	-3.0 m	kg	3 990	2 430	3 300	2 000	2 780	1 660	2 370	1 400			*1 430	1 210	16.3 m
	-4.5 m	kg	3 890	2 340	3 230	1 930	2 730	1 610	2 350	1 370			*1 610	1 270	15.8 m
	-6.0 m	kg	3 840	2 300	3 190	1 900	2 710	1 600	*2 020	1 370			*1 870	1 370	15.1 m
	-7.5 m	kg	3 850	2 300	3 200	1 910	2 730	1 620					*2 260	1 520	14.2 m
	-9.0 m	kg	3 910	2 360	3 260	1 960							*2 890	1 770	13.0 m
	-10.5 m	kg	*3 860	2 470									*3 320	2 180	11.6 m
	-12.0 m	kg											*3 430	2 950	9.7 m

Notes: 1. Machine in “Fine Mode-F” (Power Boost) for lifting capacities. 2. The above loads are in compliance with SAE J1097 and ISO 10567 Hydraulic Excavator Lifting Capacity Standards. 3. Rated loads do not exceed 87% of hydraulic lifting capacity or 75% of tipping load. 4. Rated loads marked with an asterisk (*) are limited by hydraulic capacity rather than tipping load.

VOLVO
EC260
VOLVO

Equipment

STANDARD AND OPTIONAL EQUIPMENT	
• = Standard / o = Optional	
Engine	
Turbocharged, 6 stroke diesel engine with water cooling, direct injection and charged air cooler that meets EU StageV requirements	•
Cooling system by fan clutch	•
New work mode with 10 steps	•
Cyclone pre-cleaner	•
Fuel shut off valve	•
Engine block heater	o
Coolant heater by diesel	o
Reversible fan drive	o
Precleaner, oil bath	o
Air filter, High efficiency	o
Delayed engine Shutdown	o
Automatic engine shutdown	o
Water separator with heater	o
Arctic regeneration	o
Oil sampling port for engine oil	o
Electric / Electronic control system	
Anti-theft with code lock system	•
Alternator, 120 A	•
Automatic idling system	•
Lock Out / Tag Out function on main battery switch	•
Standard light	•
Basic light package	o
Advanced light package	o
Deluxe light package	o
Arm light	o
LH light	o
Undercarriage and structures	
3-point side access	•
Direct filling DEF(AdBlue) / Sight gauge and splash guard	•
Openable 3 piece hood	•
Guardrail, fixed/foldable	o
Inner rail	o
SIPS (Side Impact Protection Steel)	o
HD Side door & hood with screen	o
Without lower structure	o
Lower frame, NLC / High walker	o
Link 600 / 700 / 800 / 900 mm triple grouser shoe	o
Link 600 mm triple grouser shoe, HD	o
Link 600 / 700 mm double grouser shoe	o
Link 700 mm single grouser shoe	o

STANDARD AND OPTIONAL EQUIPMENT	
• = Standard / o = Optional	
Hydraulic system	
EH (Electro-Hydraulic) control system	•
Auto warm up	•
Auto power boost	•
One touch power boost	•
Priority Adjustment	•
Boom down speed control	•
Shock reduction function	•
Joystick, Semi-long / 4 switch / 4 switch & 1 proportional / Simple L8 / L8	o
Hydraulic oil mineral 32 / 46 / 68	o
Longlife hyd oil mineral 32 / 46 / 68	o
Hydraulic oil bio 46	o
Pattern change	o
Boom float function	o
Straight travel pedal	o
Comfort driving control	o
Creep mode	o
Dedicated drain line	o
Variable X3 P-Q control	o
Hose rupture valve for boom	•
Hose rupture valve for arm	•
Cab and interior	
Keyless engine start and stop	•
8" HD display	•
ROPS certified cab	•
Tiltable left console	•
Digital hour meter	•
Wireless mobile charger with Kinematic sensor package option	•
Various storage space with cool/heated	•
Cleaning air gun	o
1 piece wind shield cab	o
High visibility cab	o
Cabin large mirror	o
Cabin large mirror, Heated	o
Basic / Premium / Deluxe seat	o
Seat belt, 2 inch 2 point / 3 inch 2 point / 3 inch 3 point	o
Climate control-HEPA filter	o
Radio with MP3/USB/Bluetooth	o
Front rain shield	o
Sun screen	o
Lower wiper	o
Sun shield, roof hatch	o
Foot rest, High mount	o
FOG (Falling Object Guard)	o
FOPS (Falling Object Protection Structure)	o
Safety net	o

STANDARD AND OPTIONAL EQUIPMENT	
• = Standard / o = Optional	
Digging equipment	
Boom: 6.0 m monoblock	•
Boom: VA 5.95 m / LR 10.2 m	o
Arm: 2.97 m	•
Arm: 2.5 m	o
Arm: 3.6 m	o
Arm: LR 7.85 m	o
Machine controls	
Kinematic sensor package	•
Volvo Co-Pilot 2nd display, 12.8" touchable Full HD	•
Dig Assist, Start	o
Dig Assist, 2D	o
Dig Assist, In-Field Design	o
Dig Assist, Topcon 3D-MC	o
Dig Assist, Infield-Design Advanced	o
Dig Assist, On-Board Weighing	o
Dig Assist, Laser Receiver	o
Volvo Active Control	o
Dig Assist, Boundary Limit	o
Service and maintenance	
Swing out A/C condenser	•
Fuel filler pump	o
Quick Hydraulic Oil Fill connection	o
Jump start connector	o
Auto lubrication system	o
Tool kit	o
Safety and security	
Travel alarm, beep / white noise	o
Flashing beacon, LED	o
Green light beacon	o
Rear view camera	•
Side view camera	•
HD VSV (Volvo Smart View)	o
HD VSV with obstacle detection	o
Provision, HD VSV with obstacle detection	o

Not all products are available in all markets. Under our policy of continuous improvement, we reserve the right to change specifications and design without prior notice.
The illustrations do not necessarily show the standard version of the machine.