VOLVO

Volvo Excavators 21.7 t 167 hp

EC230

Volvo Construction Equipment

EC230

For general construction, road building or something more specialist, this is a versatile machine designed to help you achieve outstanding results.

An edge in versatility

With its cutting-edge technology, outstanding efficiency and robust design, the EC230 effortlessly handles heavy loads, tackles tough terrain, and ensures exceptional productivity across a wide range of tasks and applications. Whether you're working in general construction, road building or something more specialist, the Volvo EC230 is a versatile and high performing machine designed to help you achieve outstanding results.

Operator comfort

- More precise controls
- Quieter cab
- Personalized settings for greater comfort
- ROPS cab as standard

Smart View

- Increased safety onsite and for the operator
- HD screen

Serviceability

- Ground level access for service
- Long service intervals
- Grouped filters and lubrication points
- Quick and easy oil changes

Fuel Efficiency

- Up to 10% improvement
- Engine pump optimization with engine speeds as low as1800pm
- Smart MCV

Productivity

- Volvo Active Control
- Dig Assist with On-Board Weighing
- Boom/Swing & Boom/Travel priority functions

Volvo EC230 in Detail

Engine		
Engine	Volvo	D6E
Max power at	r/min	1 800
Net, ISO 9249/SAE J1349	kW	115
	hp	156
Gross, ISO 14396/SAE J1995	kW	123
	hp	167
Max torque	Nm	730
at engine speed	r/min	1 350
No. of cylinders		6
Displacement	l	5.7
Bore	mm	98
Stroke	mm	126
Electrical system		
Voltage	V	24
Batteries	V	2 x 12
Battery capacity	Ah	140
Alternator	V/A	28 / 80
Start motor	V - kW	24 - 5.5

Undercarriage and structures		
The undercarriage has a robust X-shaped frame. Greased and sealed track chains are standard.		
Track shoes		2 x 49
Link pitch	mm	190
Shoe width	mm	600
Shoe width, triple grouser	mm	600/700/800
Shoe width, triple grouser (HD)	mm	600
Bottom rollers		2 x 8
Top rollers		2 x 2
Swing system		
The swing system uses an axial piston motors, driving a planetary gearbox for maximum torque. An automatic holding brake and antirebound valve are standard.		
Max. slew speed	r/min	11.5
Max. slew torque	kNm	83.3
Travel System		
Each track is powered by an automatic two-speed shift travel motor. The track brakes are multi-disc, spring-applied and hydraulic released. The travel motor, brake and planetary gears are well protected within the track frame.		
Max. drawbar pull	kN	183
Max. travel speed (low)	km/h	3.5
Max. travel speed (high)	km/h	5.7
Gradeability	°	35

Cab

The operator's cab has easy access via a wide door opening. The cab is supported on hydraulic dampening mounts to reduce shock and vibration levels. These along with sound absorbing lining provide low noise levels. The cab has excellent all-round visibility. The front windshield can easily slide up into the ceiling, and the lower front glass can be removed and stored in the side door.
Integrated airconditioning and heating system: The pressurized and filtered cab air is supplied by an automaticallycontrolled fan. The air is distributed throughout the cab from 14 vents.
Ergonomic operator's seat: The adjustable seat and joystick console move independently to accommodate the operator. The seat has 12 different adjustments plus a seat belt for the operator's comfort and safety. Refrigerant of the type R134a is used when this machine is equipped with air conditioning. Contains fluorinated greenhouse gas R134a, Global Warming Potential 1430 CO_2-eq.

Sound Level

Sound pressure level in cab according to ISO 6396		
L_{pA}	dB	71
External sound level according to ISO 6395 and EU Noise Directive 2000/14/EC		
L_{WA}	dB	104

Service Refill

Fuel tank	l	390
Hydraulic system, total	l	275
Hydraulic tank	l	120
Engine oil	l	25
Engine coolant	l	21
Slew reduction unit	l	5
Travel reduction unit	l	2 x 3.5

Hydraulic system

The new electro-hydraulic system and new MCV (main control valve) use intelligent technology to control on-demand flow for highproductivity, high-digging capacity and excellent fuel consumption.
The following important functions are included in the system for optimum performance:
Summation system: Combines the flow of both hydraulic pumps to ensure quick cycle times and high productivity.
Boom priority: Gives priority to the boom operation for faster raising when loading or performing deep excavations.
Arm priority: Gives priority to the arm operation for faster cycle times in leveling and for increased bucket filling when digging.
Swing priority: Gives priority to swing functions for faster simultaneous operations.
Regeneration system: Prevents cavitation and provides flow to other movements during simultaneous operations for maximum productivity.
Power boost: All digging and lifting forces are increased.
Holding valves: Boom and arm holding valves prevent the digging equipment from creeping.

Main pump: 2 x variable displacement axial piston pumps		
Maximum flow	l/min	2 x 208
Pilot pump: Gear pump		
Maximum flow	l/min	18
Max. pressure		
Implement	MPa	34.3 / 36.3
Travel circuit	MPa	34.3
Slew circuit	MPa	29.5
Pilot circuit	MPa	3.9

Hydraulic Cylinders

Mono boom		2
Bore x Stroke	ø x mm	125 x 1 235
Arm		1
Bore x Stroke	ø x mm	135 x 1 540
Bucket		1
Bore x Stroke	ø x mm	120 x 1 065
Bucket for LR boom		1
Bore x Stroke	ø x mm	100 x 865

Specifications

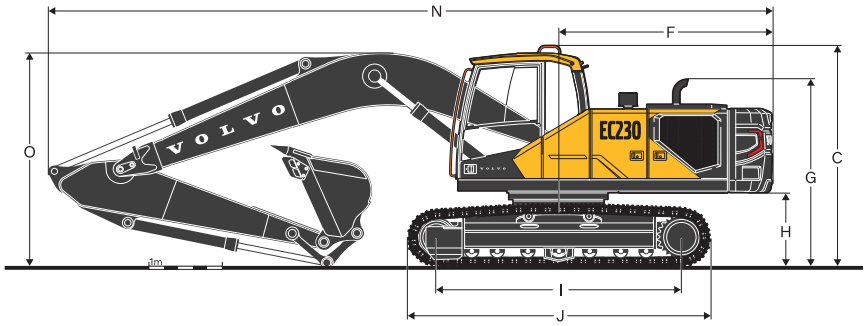

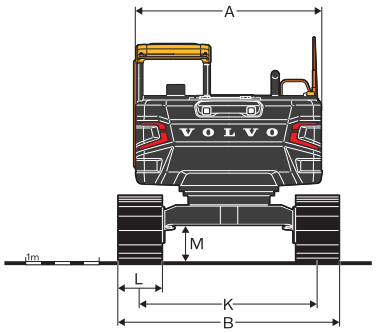

DIMENSIONS

	Unit	EC230F L		EC230F LR
Boom	**m**	**5.7**		**8.85**
Arm	**m**	**2.5**	**2.9**	**6.25**
A. Overall width of upper structure	mm	2 500	2 500	2 500
B. Overall width	mm	2 990	2 990	3 290
C. Overall height of cab	mm	2 929	2 929	2 929
D. Overall height of handrail	mm	3 021	3 021	3 021
F. Tail swing radius	mm	2 870	2 870	2 870
G. Overall height of engine hood	mm	2 243	2 243	2 243
H. Counterweight clearance *	mm	1 025	1 025	1 025
I. Tumbler length	mm	3 660	3 660	3 660
J. Track length	mm	4 460	4 460	4 460
K. Track gauge	mm	2 390	2 390	2 390
L. Shoe width	mm	600	600	800
M. Min. ground clearance *	mm	460	460	460
N. Overall length	mm	9 745	9 690	12 880
O. Overall height of boom	mm	3 080	2 940	3 055

* Without shoe grouser

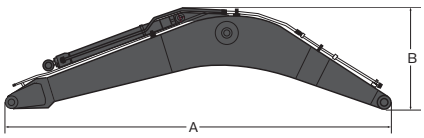

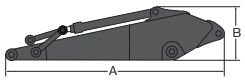

DIMENSIONS

Description	Unit	Boom		Description	Unit	Arm		
	m	5.7 HD	8.85 LR		m	2.9 HD	2.5 HD	6.25 LR
A. Length	mm	5 910	9 060	A. Length	mm	3 910	3 525	7 330
B. Height	mm	1 585	1 460	B. Height	mm	860	860	945
Width	mm	670	6 70	Width	mm	440	440	385
Weight	kg	1 621	1 974	Weight	kg	783	728	1 038
Weight*	kg	2 130	2 510	Weight	kg	1 180	1 150	1 316

* Includes cylinder, piping and pin

* Includes cylinder, linkage and pin

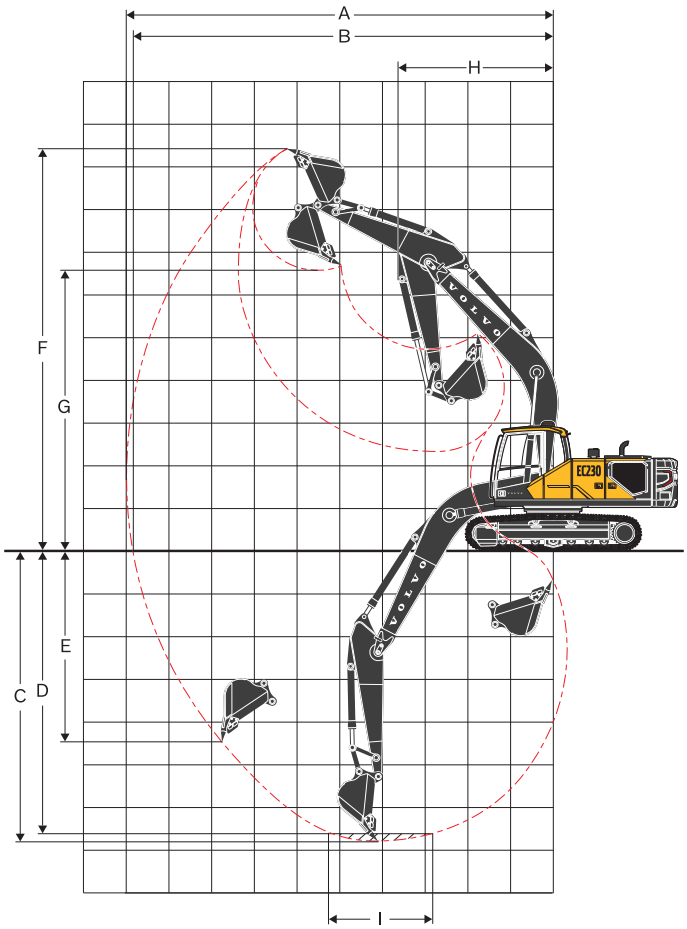

WORKING RANGES WITH DIRECT FIT BUCKET					
Description			**Unit**	**EC230F L**	**EC230F LR**
Boom			**m**	**5.7**	**8.85**
Arm			**m**	**2.5** / **2.9**	**6.25**
A. Max. digging reach			mm	9 550 / 9 930	15 800
B. Max. digging reach on ground			mm	9 380 / 9 770	15 700
C. Max. digging depth			mm	6 330 / 6 730	12 100
D. Max.digging depth (I=(2.44 m level)			mm	6 100 / 6 540	12 000
E. Max. vertical wall digging depth			mm	5 620 / 6 090	11 290
F. Max. cutting height			mm	9 220 / 9 460	13 300
G. Max. dumping height			mm	6 430 / 6 650	10 950
H. Min. front swing radius			mm	3 670 / 3 640	5 200
DIGGING FORCES WITH DIRECT FIT BUCKET					
Breakout force (bucket)	Normal	SAE J1179	kN	130 / 130	68
	Power boost	SAE J1179	kN	137 / 137	-
	Normal	ISO 6015	kN	145 / 145	77
	Power boost	ISO 6015	kN	153 / 153	-
Tearout force (arm)	Normal	SAE J1179	kN	102 / 102	44
	Power boost	SAE J1179	kN	108 / 108	-
	Normal	ISO 6015	kN	105 / 105	45
	Power boost	ISO 6015	kN	111 / 111	-

Specifications

GROUND PRESSURE

EC230F L

Description	Shoe width	Operating weight	Ground pressure	Overall width	Operating weight	Ground pressure	Overall width
	mm	kg	kPa	mm	kg	kPa	mm
Triple grouser	600	22 170	46.9	2 990	22 470	47.5	2 990
	600 (HD)	22 300	47.1	2 990	22 600	47.8	2 990
	700	22 580	40.9	3 090	22 880	41.4	3 090
	800	22 860	36.2	3 190	23 160	36.7	3 190
		EC230F L, 5.7 m HD boom, 2.9 m HD arm, 1 100 kg bucket, 4 200 kg counterweight			**EC230F L, 5.7 m HD boom, 2.9 m HD arm, 1 100 kg bucket, 4 500 kg counterweight**		

Description	Shoe width	Operating weight	Ground pressure	Overall width
	mm	kg	kPa	mm
Triple grouser	600	22 140	46.8	2 990
	600 (HD)	22 270	47.1	2 990
	700	22 550	40.9	3 090
	800	22 830	36.2	3 190
		EC230F L, 5.7 m HD boom, 2.5 m HD arm, 1 100 kg bucket, 4 200 kg counterweight		

EC230F LR

Description	Shoe width	Operating weight	Ground pressure	Overall width
	mm	kg	kPa	mm
Triple grouser	600	23 330	49.3	3 290
	600 (HD)	23 460	49.6	3 290
	700	23 740	43.	3 390
	800	24 020	38.1	3 490
		EC230F LR, 8.85 m LR boom, 6.25 m LR arm, 453 kg bucket, 4 900 kg counterweight		

BUCKET SELECTION GUIDE

EC230F L with 600 mm shoe, 4 200 kg counterweight

Bucket Type		Capacity	Cutting width	Weight	Recommended maximum material density (kg/m³)		
					5.7 m HD Boom		8.85 m LR Boom
		L	mm	kg	H2.5 m Arm	H2.9 m Arm	LR6.25 m Arm
V1	GP	1 100	1 235	876	1 800	1 800	
		1 200	1 335	930	1 800	1 800	
		1 250	1 340	929	1 800	1 800	
		1 300	1 430	970	1 800	1 800	
	HD	1 250	1 340	1 118	2 100	2 100	
V2	GP	520	1 020	452	1 800	1 800	1 600
		1 100	1 320	931	1 800	1 800	
		1 100	1 320	857	1 800	1 800	
		1 100	1 320	939	1 800	1 800	
		1 200	1 400	803	1 800	1 800	
		1 220	1 460	937	1 800	1 800	
		1 220	1 460	949	1 800	1 800	
		1 220	1 505	889	1 800	1 800	
		1 300	1 520	934	1 800	1 800	
		1 400	1 580	960	1 800	1 800	
V4	FD	460	1 250	422	1 600	1 600	1 600
		950	1 500	725	1 600	1 600	
		1 030	1 600	761	1 600	1 600	
	GP	480	600	623	1 800	1 800	
		480	600	666	1 800	1 800	
		480	600	633	1 800	1 800	
		540	900	403	1 800	1 800	1 600
		540	900	434	1 800	1 800	1 600
		920	1 090	812	1 800	1 800	
		920	1 090	854	1 800	1 800	
		1 090	1 240	940	1 800	1 800	
		1 090	1 240	909	1 800	1 800	
		1 090	1 240	950	1 800	1 800	
		1 090	1 240	919	1 800	1 800	
		1 270	1 380	993	1 800	1 800	
		1 270	1 380	1 035	1 800	1 800	
		1 270	1 380	1 008	1 800	1 800	
		1 270	1 380	1 003	1 800	1 800	
		1 440	1 540	1 105	1 800	1 800	
		1 440	1 540	1 085	1 800	1 800	
		1 440	1 540	1 089	1 800	1 800	
	HD	480	600	738	2 100	2 100	
		750	900	809	2 100	2 100	
		750	900	872	2 100	2 100	
		920	1 090	955	2 100	2 100	
		1 090	1 240	974	2 100	2 100	
		1 090	1 240	984	2 100	2 100	
		1 090	1 240	1 047	2 100	2 100	
		1 090	1 240	1 054	2 100	2 100	
		1 270	1 380	1 059	2 100	2 000	
		1 270	1 380	1 129	2 100	2 000	

Please consult with your Volvo dealer for the proper match of buckets and attachments to suit the application.
The recommendations are given as a guide only, based on typical operation conditions.
Bucket capacity based on ISO 7451, heaped material with a 1:1 angle of repose.

Maximum material density
D: 2 100 kg/m³
C: 1 800 kg/m³
B: 1 500 kg/m³
A: 1 200 kg/m³
X : Not recommended

Specifications

LIFTING CAPACITY EC230F

Lifting capacity at the arm end without bucket.
For lifting capacity including bucket, simply subtract actual weight of the direct fit bucket or the bucket with quick coupler from the following values.

	Lifting hook related to ground level		1.5 m		3.0 m		4.5 m		6.0 m		7.5 m		Max. reach		Max.
			Along UC	Across UC	Along UC	Across UC	Along UC	Across UC	Along UC	Across UC	Along UC	Across UC	Along UC	Across UC	m
Boom : 5.7 m HD Arm : 2.9 m Shoe : 600 mm CWT : 4 000 kg UC : STD	7.5 m	kg							*4 740	4 600			*4 690	4 350	6.18
	6.0 m	kg							*4 640	4 600			*4 370	3 220	7.31
	4.5 m	kg							*5 160	4 410	4 640	3 030	4 130	2 680	8.01
	3.0 m	kg					*7 700	6 330	*5 990	4 120	4 510	2 900	3 760	2 400	8.38
	1.5 m	kg					*9 430	5 740	6 110	3 840	4 360	2 770	3 620	2 290	8.46
	0 m	kg			*5 190	*5 190	9 180	5 430	5 890	3 640	4 240	2 660	3 690	2 320	8.27
	-1.5 m	kg	*6 000	*6 000	*9 900	*9 900	9 080	5 340	5 790	3 560	4 210	2 630	4 000	2 510	7.79
	-3.0 m	kg	*10 920	*10 920	*14 200	10 460	9 170	5 420	5 840	3 600			4 760	2 980	6.94
	-4.5 m	kg			*11 500	10 890	*8 170	5 670					*6 230	4 220	5.58
Boom : 5.7 m HD Arm : 2.9 m Shoe : 600 mm CWT : 4 000 kg UC : Long	7.5 m	kg							*4 740	*4 740			*4 700	*4 700	6.17
	6.0 m	kg							*4 640	*4 640			*4 380	3 610	7.31
	4.5 m	kg							*5 160	4 940	*4 850	3 400	*4 320	3 020	8.01
	3.0 m	kg					*7 700	7 170	*5 990	4 650	5 120	3 280	4 270	2 720	8.38
	1.5 m	kg					*9 430	6 560	*6 870	4 360	4 960	3 140	4 120	2 610	8.46
	0 m	kg			*5 190	*5 190	*10 380	6 230	6 760	4 160	4 850	3 040	4 210	2 640	8.27
	-1.5 m	kg	*6 000	*6 000	*9 900	*9 900	*10 520	6 150	6 660	4 070	4 810	3 000	4 570	2 860	7.79
	-3.0 m	kg	*10 920	*10 920	*14 200	12 250	*9 910	6 220	6 710	4 110			5 450	3 400	6.94
	-4.5 m	kg			*11 500	*11 500	*8 170	6 480					*6 230	4 790	5.58
Boom : 5.7 m HD Arm : 2.9 m Shoe : 600 mm CWT : 4 200 kg UC : STD	7.5 m	kg							*4 740	4 710			*4 690	4 460	6.18
	6.0 m	kg							*4 640	*4 640			*4 370	3 310	7.31
	4.5 m	kg							*5 160	4 520	4 750	3 110	4 230	2 760	8.01
	3.0 m	kg					*7 700	6 500	*5 990	4 240	4 610	2 990	3 850	2 480	8.38
	1.5 m	kg					*9 430	5 910	6 250	3 960	4 470	2 850	3 710	2 370	8.46
	0 m	kg			*5 190	*5 190	9 410	5 600	6 030	3 760	4 350	2 750	3 780	2 390	8.27
	-1.5 m	kg	*6 000	*6 000	*9 900	*9 900	9 310	5 510	5 940	3 680	4 320	2 720	4 110	2 590	7.79
	-3.0 m	kg	*10 920	*10 920	*14 200	10 770	9 400	5 590	5 990	3 720			4 880	3 080	6.94
	-4.5 m	kg			*11 500	11 200	*8 170	5 840					*6 230	4 340	5.58
Boom : 5.7 m HD Arm : 2.9 m Shoe : 600 mm CWT : 4 200 kg UC : Long	7.5 m	kg							*4 740	*4 740			*4 700	*4 700	6.17
	6.0 m	kg							*4 640	*4 640			*4 380	3 700	7.31
	4.5 m	kg							*5 160	5 060	*4 850	3 500	*4 320	3 110	8.01
	3.0 m	kg					*7 700	7 340	*5 990	4 770	*5 210	3 370	4 370	2 810	8.38
	1.5 m	kg					*9 430	6 740	*6 870	4 480	5 080	3 230	4 220	2 690	8.46
	0 m	kg			*5 190	*5 190	*10 380	6 410	6 910	4 280	4 960	3 130	4 310	2 720	8.27
	-1.5 m	kg	*6 000	*6 000	*9 900	*9 900	*10 520	6 320	6 820	4 190	4 930	3 090	4 680	2 950	7.79
	-3.0 m	kg	*10 920	*10 920	*14 200	12 590	*9 910	6 400	6 870	4 230			5 570	3 500	6.94
	-4.5 m	kg			*11 500	*11 500	*8 170	6 660					*6 230	4 920	5.58

Notes: 1. Machine in "Fine Mode-F" (Power Boost) for lifting capacities. 2. The above loads are in compliance with SAE J1097 and ISO 10567 Hydraulic Excavator Lifting Capacity Standards. 3. Rated loads do not exceed 87% of hydraulic lifting capacity or 75% of tipping load. 4. Rated loads marked with an asterisk (*) are limited by hydraulic capacity rather than tipping load.

LIFTING CAPACITY EC230F

Lifting capacity at the arm end without bucket.
For lifting capacity including bucket, simply subtract actual weight of the direct fit bucket or the bucket with quick coupler from the following values.

	Lifting hook related to ground level		1.5 m		3.0 m		4.5 m		6.0 m		7.5 m		Max. reach		Max.
			Along UC	Across UC	Along UC	Across UC	Along UC	Across UC	Along UC	Across UC	Along UC	Across UC	Along UC	Across UC	m
Boom : 5.7 m HD Arm : 2.9 m Shoe : 600 mm CWT : 4 500 kg UC : STD	7.5 m	kg							*4 740	*4 740			*4 690	4 630	6.18
	6.0 m	kg							*4 640	*4 640			*4 370	3 440	7.31
	4.5 m	kg							*5 160	4 700	*4 850	3 250	*4 310	2 880	8.01
	3.0 m	kg					*7 700	6 750	*5 990	4 410	4 780	3 120	3 990	2 590	8.38
	1.5 m	kg					*9 430	6 160	6 470	4 130	4 630	2 990	3 850	2 480	8.46
	0 m	kg			*5 190	*5 190	9 740	5 850	6 250	3 930	4 510	2 880	3 920	2 510	8.27
	-1.5 m	kg	*6 000	*6 000	*9 900	*9 900	9 640	5 760	6 160	3 850	4 480	2 850	4 260	2 720	7.79
	-3.0 m	kg	*10 920	*10 920	*14 200	11 230	9 730	5 840	6 200	3 890			5 060	3 230	6.94
	-4.5 m	kg			*11 500	*11 500	*8 170	6 090					*6 230	4 530	5.58
Boom : 5.7 m HD Arm : 2.9 m Shoe : 600 mm CWT : 4 500 kg UC : Long	7.5 m	kg							*4 740	*4 740			*4 700	*4 700	6.17
	6.0 m	kg							*4 640	*4 640			*4 380	3 840	7.31
	4.5 m	kg							*5 160	*5 160	*4 850	3 630	*4 320	3 230	8.01
	3.0 m	kg					*7 700	7 610	*5 990	4 950	*5 210	3 510	*4 430	2 930	8.38
	1.5 m	kg					*9 430	7 000	*6 870	4 660	5 250	3 370	4 370	2 810	8.46
	0 m	kg			*5 190	*5 190	*10 380	6 680	7 150	4 460	5 130	3 260	4 460	2 850	8.27
	-1.5 m	kg	*6 000	*6 000	*9 900	*9 900	*10 520	6 590	7 050	4 370	5 100	3 230	4 840	3 080	7.79
	-3.0 m	kg	*10 920	*10 920	*14 200	13 080	*9 910	6 670	7 100	4 410			5 760	3 650	6.94
	-4.5 m	kg			*11 500	*11 500	*8 170	6 920					*6 230	5 120	5.58
Boom : 5.7 m HD Arm : 2.5 m Shoe : 600 mm CWT : 4 000 kg UC : STD	7.5 m	kg											*5 210	5 020	5.63
	6.0 m	kg							*5 050	4 520			*5 130	3 560	6.86
	4.5 m	kg					*6 450	*6 450	*5 520	4 350	4 590	2 990	4 490	2 910	7.6
	3.0 m	kg					*8 280	6 220	*6 320	4 090	4 480	2 890	4 050	2 600	7.98
	1.5 m	kg					9 500	5 710	6 090	3 830	4 360	2 770	3 900	2 480	8.07
	0 m	kg					9 220	5 470	5 910	3 670	4 270	2 690	3 990	2 520	7.87
	-1.5 m	kg			*10 380	*10 380	9 190	5 440	5 850	3 620			4 380	2 760	7.36
	-3.0 m	kg			*13 500	10 730	9 310	5 550	5 940	3 700			5 350	3 360	6.46
	-4.5 m	kg			*10 370	*10 370	*7 400	5 850					*6 490	5 110	4.96
Boom : 5.7 m HD Arm : 2.5 m Shoe : 600 mm CWT : 4 000 kg UC : Long	7.5 m	kg											*5 210	*5 210	5.63
	6.0 m	kg							*5 050	5 050			*5 130	3 990	6.86
	4.5 m	kg					*6 450	*6 450	*5 520	4 870	*5 190	3 360	5 080	3 280	7.6
	3.0 m	kg					*8 280	7 050	*6 320	4 600	5 090	3 260	4 600	2 940	7.98
	1.5 m	kg					*9 880	6 520	6 970	4 350	4 960	3 150	4 440	2 810	8.07
	0 m	kg					*10 600	6 280	6 780	4 180	4 870	3 070	4 540	2 870	7.87
	-1.5 m	kg			*10 370	*10 370	*10 510	6 240	6 720	4 130			5 000	3 140	7.36
	-3.0 m	kg			*13 500	12 540	*9 650	6 350	6 810	4 210			6 120	3 820	6.46
	-4.5 m	kg			*10 370	*10 370	*7 400	6 660					*6 490	5 800	4.96

Notes: 1. Machine in “Fine Mode-F” (Power Boost) for lifting capacities. 2. The above loads are in compliance with SAE J1097 and ISO 10567 Hydraulic Excavator Lifting Capacity Standards. 3. Rated loads do not exceed 87% of hydraulic lifting capacity or 75% of tipping load. 4. Rated loads marked with an asterisk (*) are limited by hydraulic capacity rather than tipping load.

Specifications

LIFTING CAPACITY EC230F

Lifting capacity at the arm end without bucket.
For lifting capacity including bucket, simply subtract actual weight of the direct fit bucket or the bucket with quick coupler from the following values.

	Lifting hook related to ground level		1.5 m		3.0 m		4.5 m		6.0 m		7.5 m		Max. reach		Max.
			Along UC	Across UC	Along UC	Across UC	Along UC	Across UC	Along UC	Across UC	Along UC	Across UC	Along UC	Across UC	m
Boom : 5.7 m HD Arm : 2.5 m Shoe : 600 mm CWT : 4 200 kg UC : STD	7.5 m	kg											*5 210	5 150	5.63
	6.0 m	kg							*5 050	4 630			*5 130	3 650	6.86
	4.5 m	kg					*6 450	*6 450	*5 520	4 460	4 700	3 070	4 590	3 000	7.6
	3.0 m	kg					*8 280	6 390	*6 320	4 200	4 590	2 980	4 150	2 680	7.98
	1.5 m	kg					9 720	5 870	6 240	3 950	4 470	2 860	3 990	2 560	8.07
	0 m	kg					9 450	5 640	6 060	3 790	4 380	2 780	4 090	2 600	7.87
	-1.5 m	kg			*10 380	*10 380	9 410	5 610	6 000	3 730			4 490	2 850	7.36
	-3.0 m	kg			*13 500	11 040	9 540	5 710	6 080	3 810			5 490	3 470	6.46
	-4.5 m	kg			*10 370	*10 370	*7 400	6 020					*6 490	5 250	4.96
Boom : 5.7 m HD Arm : 2.5 m Shoe : 600 mm CWT : 4 200 kg UC : Long	7.5 m	kg											*5 210	*5 210	5.63
	6.0 m	kg							*5 050	*5 050			*5 130	4 090	6.86
	4.5 m	kg					*6 450	*6 450	*5 520	4 990	*5 190	3 450	*5 190	3 380	7.6
	3.0 m	kg					*8 280	7 220	*6 320	4 730	5 210	3 360	4 700	3 030	7.98
	1.5 m	kg					*9 880	6 690	7 130	4 470	5 080	3 240	4 540	2 900	8.07
	0 m	kg					*10 600	6 450	6 940	4 300	4 990	3 160	4 650	2 950	7.87
	-1.5 m	kg			*10 370	*10 370	*10 510	6 420	6 880	4 250			5 120	3 230	7.36
	-3.0 m	kg			*13 500	12 870	*9 650	6 530	6 970	4 330			6 260	3 930	6.46
	-4.5 m	kg			*10 370	*10 370	*7 400	6 840					*6 490	5 960	4.96
Boom : 5.7 m HD Arm : 2.5 m Shoe : 600 mm CWT : 4 500 kg UC : STD	7.5 m	kg											*5 210	*5 210	5.63
	6.0 m	kg							*5 050	4 810			*5 130	3 800	6.86
	4.5 m	kg					*6 450	*6 450	*5 520	4 630	4 860	3 200	4 750	3 130	7.6
	3.0 m	kg					*8 280	6 640	*6 320	4 370	4 750	3 110	4 300	2 800	7.98
	1.5 m	kg					*9 880	6 130	6 460	4 120	4 630	2 990	4 140	2 680	8.07
	0 m	kg					9 780	5 890	6 280	3 960	4 540	2 910	4 240	2 720	7.87
	-1.5 m	kg			*10 380	*10 380	9 740	5 860	6 220	3 910			4 660	2 980	7.36
	-3.0 m	kg			*13 500	11 500	*9 650	5 970	6 300	3 980			5 680	3 630	6.46
	-4.5 m	kg			*10 370	*10 370	*7 400	6 270					*6 490	5 480	4.96
Boom : 5.7 m HD Arm : 2.5 m Shoe : 600 mm CWT : 4 500 kg UC : Long	7.5 m	kg											*5 210	*5 210	5.63
	6.0 m	kg							*5 050	*5 050			*5 130	4 240	6.86
	4.5 m	kg					*6 450	*6 450	*5 520	5 170	*5 190	3 590	*5 190	3 510	7.6
	3.0 m	kg					*8 280	7 490	*6 320	4 910	5 380	3 490	4 860	3 160	7.98
	1.5 m	kg					*9 880	6 960	*7 140	4 650	5 250	3 380	4 700	3 020	8.07
	0 m	kg					*10 600	6 720	7 170	4 480	5 160	3 290	4 810	3 080	7.87
	-1.5 m	kg			*10 370	*10 370	*10 510	6 690	7 110	4 430			5 290	3 370	7.36
	-3.0 m	kg			*13 500	13 370	*9 650	6 800	*7 100	4 510			*6 380	4 100	6.46
	-4.5 m	kg			*10 370	*10 370	*7 400	7 110					*6 490	6 190	4.96

Notes: 1. Machine in "Fine Mode-F" (Power Boost) for lifting capacities. 2. The above loads are in compliance with SAE J1097 and ISO 10567 Hydraulic Excavator Lifting Capacity Standards. 3. Rated loads do not exceed 87% of hydraulic lifting capacity or 75% of tipping load. 4. Rated loads marked with an asterisk (*) are limited by hydraulic capacity rather than tipping load.

VOLVO
EC230
VOLVO

Equipment

STANDARD AND OPTIONAL EQUIPMENT	
• = Standard / o = Optional	
Engine	
Turbocharged, 4 stroke diesel engine with water cooling, direct injection and charged air cooler that meets CN T3 requirements	•
Cooling system by Direct Fan	•
Cooling system by Hydraulic Fan	o
Air filter with indicator	•
Air intake heater	•
Cyclone pre-cleaner	•
Fuel shut off valve	•
Engine block heater	o
Coolant heater by diesel	o
Precleaner, oil bath	o
Delayed engine Shutdown	•
Automatic engine shutdown	•
Water separator with heater	o
Fuel filter and water separator	•
Electric / Electronic control system	
Anti-theft with code lock system	•
Automatic idling system	•
Standard light	•
Extra light	o
Master electrical disconnect switch	•
Engine restart prevention circuit	•
Undercarriage and structures	
3-point side access	•
Guardrail, fixed/foldable	o
Lower frame, LC	o
Lower frame, STD	o
Link 600 / 700 / 800 / 900 mm triple grouser shoe	o
Link 600 mm triple grouser shoe, HD	o
Dual toolbox	•
Undercover STD / HD	o
Hydraulic system	
EH (Electro-Hydraulic) control system	•
One touch power boost	•
Priority Adjustment	•
Boom down speed control	•
Shock reduction function	•
Joystick, Semi-long / 4 switch / 4 switch & 1 proportional / Simple L8 / L8	o
Hydraulic oil mineral 32 / 46 / 68	o
Longlife hyd oil mineral 32 / 46 / 68	o
Pattern change	•
Boom float function	o
Comfort driving control	o
Dedicated drain line	o
Hose rupture valve for boom	o
Hose rupture valve for arm	o

STANDARD AND OPTIONAL EQUIPMENT	
• = Standard / o = Optional	
Cab and interior	
ROPS certified cab	•
FOG (Falling Object Guard)	o
FOPS (Falling Object Protection Structure)	o
8» HD display	•
Mechanical sus/Air sus seat	o
Seat belt, 2 inch 2 point / 3 inch 2 point / 3 inch 3 point	o
Front rain shield	o
Sun screens, front, roof, rear	•
Lower wiper	o
Sun shield, roof hatch	o
Safety net	o
Travel pedals and hand levers	•
Adjustable operator seat and joystick control console	•
Heater & air-conditioner, automatic	•
Air-conditioner, automatic	o
AM/FM/USB/Bluetooth stereo with Keypad	•
Large storage area	•
Pull-up type front window	•
Removable lower windshield	•
Digging equipment	
Boom: 5.7 m HD monoblock	•
Arm: 2.9 m HD	o
Arm: 2.5 m HD	o
Machine controls	
Kinematic sensor package	o
Volvo Co-Pilot 2nd display, 12.8» touchable Full HD	o
Dig Assist, Start	o
Dig Assist, 2D	o
Dig Assist, In-Field Design	o
Dig Assist, Topcon 3D-MC	o
Dig Assist, Infield-Design Advanced	o
Dig Assist, On-Board Weighing	o
Dig Assist, Laser Receiver	o
Volvo Active Control	o
Dig Assist, Boundary Limit	o
Service and maintenace	
Swing out A/C condenser	•
Fuel filler pump	o
Jump start connector	o
Tool kit	o
Safety and security	
Travel alarm, beep / white noise	o
Flashing beacon, LED	o
Rear view camera	o
Side view camera	o
HD VSV (Volvo Smart View)	o

Not all products are available in all markets. Under our policy of continuous improvement, we reserve the right to change specifications and design without prior notice.
The illustrations do not necessarily show the standard version of the machine.

VOLVO
EC230

Volvo Smart View

Volvo Smart View with Obstacle Detection provides operators with a 360° view of the machines surroundings thanks to the camera and the new radar detection system. This high technology can identify obstacles as either an object or a human being, allowing the operator to take appropriate action.

Stay connected

In the comfort of the new cab, you can charge your mobile phone wirelessly or plugged in. You also have the option to use USB connections to access your music playlists or podcasts. The Bluetooth speaker enables you to have clear communication when making a phone call.

Comfort

The new style cab's ambition is to being more comfortable and make your work easier. A handy storage space allows you to store your coolbox or shoes while you work. You will enjoy reduced noise levels, built-in sunscreen and improved HVAC. Moreover, the new comfortable seat offer will allow to reduce the operator fatigue when working all day.

Fuel efficiency

In the new Volvo excavators our improved electro-hydraulic system reduces your fuel consumption dramatically.
It is done by regulating engine speed and hydraulic flow rate based on the task at hand. This ensures that only the necessary amount of energy is used, leading to improved fuel efficiency and lower operating costs.

Outstanding cooling performance

The EC230 is equipped with smart electric fans cooling system. It automatically adjusts independently the fans speed according to engine coolant temperature, hydraulic temperature and hydraulic workload. This minimizes unnecessary energy consumption and improve overall fuel efficiency. By reducing engine load and preventing overheating, the system ensures optimum excavator performance, extends component life and lowers operating costs.

New electro-hydraulic system

At the heart of the fuel efficiency improvements is the new electro-hydraulic system with enhanced main control valve (MCV).
This intelligent technology uses electronic sensors to monitor the operator's movements and send signals to the machine's on-board computer (ECU) which processes the information and sends commands to the main control valve.
The result is smooth and precise movement of the excavator's boom, bucket, and other hydraulic functions allowing for more accurate digging and loading.

Dig Assist

A must-have on the modern construction site, Dig Assist provides unrivalled machine guidance and control technology, enabling operators to work with the highest levels of precision and accuracy. The addition of On-Board Weighing provides real-time insights into the bucket's load, helping to eliminate over-loading, underloading, reweighing and waiting times.

Productivity

Advanced electric control joystick and full electric travel pedals provide lightning-fast response times. Boom/Swing priority functions help operators work with speed and ease by prioritizing one function over another, improving cycle times.

Serviceability

Minimizing downtime is key to protect your total cost of ownership. Easy access, clean and quick oil changes, as well as 1 000-hour intervals for engine oil, oil and fuel filter further increase your machine availability. Swing out condenser also makes cleaning of the radiator and oil cooler more convenient.