VOLVO

Volvo Excavators 21.0-26.4 t 175 hp

EC230

Volvo Construction Equipment

EC230

For general construction, road building or something more specialist, this is a versatile machine designed to help you achieve outstanding results

An edge in versatility

With its cutting-edge technology, outstanding efficiency and robust design, the EC230 effortlessly handles heavy loads, tackles tough terrain, and ensures exceptional productivity across a wide range of tasks and applications. Whether you're working in general construction, road building or something more specialist, the Volvo EC230 is a versatile and high performing machine designed to help you achieve outstanding results.

Operator comfort

- More precise controls
- Quieter cab
- Personalized settings for greater comfort
- ROPS cab as standard

Smart View with Obstacle Detection

- Increased safety onsite and for the operator
- Radar warns for items outside the screen
- HD screen
- Human identifying alarm separate from other obstacles

Serviceability

- Ground level access for service
- Long service intervals
- Grouped filters and lubrication points
- Quick and easy oil changes

Fuel Efficiency

- Up to 15% improvement
- Engine pump optimization with engine speeds as low as 1 600 pm
- Smart MCV

Productivity

- Volvo Active Control
- Dig Assist with On-Board Weighing
- Electro-hydraulic system
- Boom/Swing & Boom/Travel priority functions

Co-Pilot

The new Volvo Co-Pilot features a new 12.8" display with full HD resolution. Associated with the new HD side and rear camera, it gives better visibility on your operations. Both hardware and software improvements provide increased control on the Dig Assist applications.

Smooth Control

You will find the new joystick controls offer smoother, easier operation. Because the controls are more precise, it is easier for you to achieve what you are trying to do, leading to better machine performance.

Volvo Smart View

Volvo Smart View with Obstacle Detection provides operators with a 360° view of the machines surroundings thanks to the camera and the new radar detection system. This high technology can identify obstacles as either an object or a human being, allowing the operator to take appropriate action.

Stay connected

In the comfort of the new cab, you can charge your mobile phone wirelessly or plugged in. You also have the option to use USB connections to access your music playlists or podcasts. The Bluetooth speaker enables you to have clear communication when making a phone call.

Comfort

The new style cab's ambition is to being more comfortable and make your work easier. A handy storage space allows you to store your coolbox or shoes while you work. You will enjoy reduced noise levels, built-in sunscreen and improved HVAC. Moreover, the new comfortable seat offer will allow to reduce the operator fatigue when working all day.

Fuel efficiency

In the new Volvo excavators our improved electro-hydraulic system reduces your fuel consumption dramatically. It is done by regulating engine speed and hydraulic flow rate based on the task at hand. This ensures that only the necessary amount of energy is used, leading to improved fuel efficiency and lower operating costs.

Outstanding cooling performance

The EC230 is equipped with smart electric fans cooling system. It automatically adjusts independently the fans speed according to engine coolant temperature, hydraulic temperature and hydraulic workload. This minimizes unnecessary energy consumption and improve overall fuel efficiency. By reducing engine load and preventing overheating, the system ensures optimum excavator performance, extends component life and lowers operating costs.

New electro-hydraulic system

At the heart of the fuel efficiency improvements is the new electro-hydraulic system with enhanced main control valve (MCV). This intelligent technology uses electronic sensors to monitor the operator's movements and send signals to the machine's on-board computer (ECU) which processes the information and sends commands to the main control valve. The result is smooth and precise movement of the excavator's boom, bucket, and other hydraulic functions allowing for more accurate digging and loading.

Dig Assist

A must-have on the modern construction site, Dig Assist provides unrivalled machine guidance and control technology, enabling operators to work with the highest levels of precision and accuracy.
The addition of On-Board Weighing provides real-time insights into the bucket's load, helping to eliminate over-loading, underloading, reweighing and waiting times.

Productivity

Advanced electric control joystick and full electric travel pedals provide lightning-fast response times. Boom/Swing priority functions help operators work with speed and ease by prioritizing one function over another, improving cycle times.

Serviceability

Minimizing downtime is key to protect your total cost of ownership. Easy access, clean and quick oil changes, as well as 1 000-hour intervals for engine oil, oil and fuel filter further increase your machine availability. Swing out condenser also makes cleaning of the radiator and oil cooler more convenient.

Volvo EC230 in detail

Engine

The latest generation, Volvo engine Stage V emissions compliant diesel engine fully meets the demands of the latest, emsissions regulations. Featuring Volvo Advanced Combustion Technology (V-ACT), it is designed to deliver superior performance and fuel efficiency. The engine uses precise, high pressure fuel injectors, turbo charger and air-to-air intercooler, and electronic engine controls to optimize machine performance.
- **Air Filter:** 3-stage with precleaner
- **Automatic Idling System:** Reduces engine speed to idle when the levers and pedals are not activated resulting in less fuel consumption and low cab noise levels.

Engine	Volvo	D6J
Max power at	r/min	1 800
Net, ISO 9249/SAE J1349	kW	128
	hp	174
Gross, ISO 14396/SAE J1995	kW	129
	hp	175
Power outpout at		
Operating max	r/min	1 600
Travel max	r/min	1 800
Max torque	Nm	849
at engine speed	r/min	1 350
No. of cylinders		6
Displacement	l	5.7
Bore	mm	98
Stroke	mm	126

Electrical System

High-capacity electrical system that is well protected. Waterproof double-lock harness plugs are used to secure corrosion-free connections. The main relays and solenoid valves are shielded to prevent damage. Contronics provides advanced monitoring of machine functions and important diagnostic information.

Voltage	V	24
Batteries	V	2 x 12
Battery capacity	Ah	140
Alternator	V/A	28 V / 180 A
Start motor	V - kW	24 / 5.5

Undercarriage

The undercarriage has a robust X-shaped frame. Greased and sealed track chains are standard.

		EC230F L
Track shoe		2 x 49
Link pitch	mm	190
Shoe width, triple grouser	mm	500/600/700 /800/900
Shoe width, triple grouser (HD)	mm	600
Shoe width, double grouser	mm	700
Shoe width, single grouser	mm	600
Bottom rollers		2 x 8
Top rollers		2 x 2
		EC230F NL
Track shoe		2 x 49
Link pitch	mm	190
Shoe width, triple grouser	mm	500 / 600 / 700
Shoe width, triple grouser (HD)	mm	600
Shoe width, double grouser	mm	700
Bottom rollers		2 x 8
Top rollers		2 x 2
		EC230F N
Track shoe		2 x 46
Link pitch	mm	190
Shoe width, triple grouser	mm	600 / 700 / 800 / 900
Shoe width, triple grouser (HD)	mm	600
Bottom rollers		2 x 7
Top rollers		2 x 2
		EC230F NH
Track shoe		2 x 45
Link pitch	mm	203
Shoe width, triple grouser	mm	500/600/700
Bottom rollers		2 x 7
Top rollers		2 x 2

Swing system		
The swing system uses an axial piston motors, driving a planetary gearbox for maximum torque. An automatic holding brake and antirebound valve are standard.		
Max. slew speed	r/min	11.5
Max. slew torque	kNm	83.3

Travel System		
Each track is powered by an automatic two-speed shift travel motor. The track brakes are multi-disc, spring-applied and hydraulic released. The travel motor, brake and planetary gears are well protected within the track frame.		
Max. drawbar pull	kN	178
Max. travel speed (low)	km/h	3.4
Max. travel speed (high)	km/h	5.6
Gradeability	°	35

Cab
The operator's cab has easy access via a wide door opening. The cab is supported on hydraulic dampening mounts to reduce shock and vibration levels. These along with sound absorbing lining provide low noise levels. The cab has excellent all-round visibility. The front windshield can easily slide up into the ceiling, and the lower front glass can be removed and stored in the side door.

Sound Level		
Sound level in cab according to ISO 6396		
L_{pA}	dB	70
External sound level according to ISO 6395, EU Noise Directive (2000/14/EC)		
L_{WA}	dB	99

Service Refill		
Fuel tank	l	315
DEF/AdBlue® tank	l	27
Hydraulic system, total	l	215
Hydraulic tank	l	98
Engine oil	l	25
Engine coolant	l	35
Slew reduction unit	l	4
Travel reduction unit	l	2 x 3.5

Hydraulic system
The new electro-hydraulic system and new MCV (main control valve) use intelligent technology to control on-demand flow for highproductivity, high-digging capacity and excellent fuel consumption. The following important functions are included in the system: **Summation system:** Combines the flow of both hydraulic pumps to ensure quick cycle times and high productivity. **Boom priority:** Gives priority to the boom operation for faster raising when loading or performing deep excavations. **Arm priority:** Gives priority to the arm operation for faster cycle times in leveling and for increased bucket filling when digging. **Swing priority:** Gives priority to swing functions for faster simultaneous operations. **Regeneration system:** Prevents cavitation and provides flow to other movements during simultaneous operations for maximum productivity. **Power boost:** All digging and lifting forces are increased. **Auto warm up:** Hydraulic oil temprature can be set below the threshold that has been set. **Creep mode:** Lower travel speed(10%~50% of 1st full speed) can be set by creep switch on. **Holding valves:** Boom and arm holding valves prevent the digging equipment from creeping.

Main pump: 2 x Variable displacement axial piston pumps		
Maximum flow	l/min	2 x 208
Pilot pump: Gear pump		
Maximum flow	l/min	1 x 16
Max. pressure		
Implement	MPa	34.3 / 36.3
Travel circuit	MPa	34.3
Slew circuit	MPa	29.5
Pilot circuit	MPa	3.9

Hydraulic Cylinders		
Boom		2
Bore x Stroke	ø x mm	125 x 1 235
2 piece boom		1
Bore x Stroke	ø x mm	160 x 1 070
Arm		1
Bore x Stroke	ø x mm	135 x 1 540
Bucket		1
Bore x Stroke	ø x mm	120 x 1 065
Bucket for LR boom		1
Bore x Stroke	ø x mm	100 x 865

Specifications

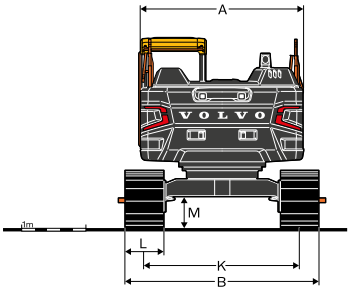

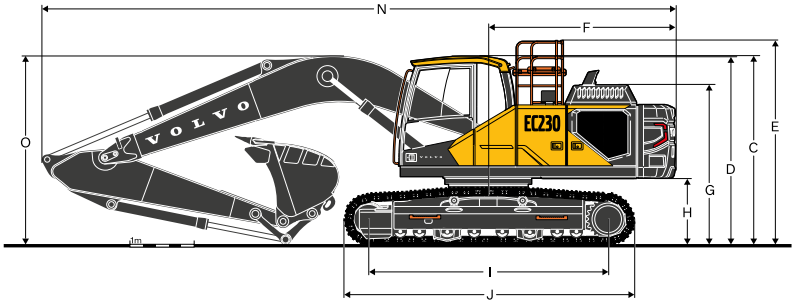

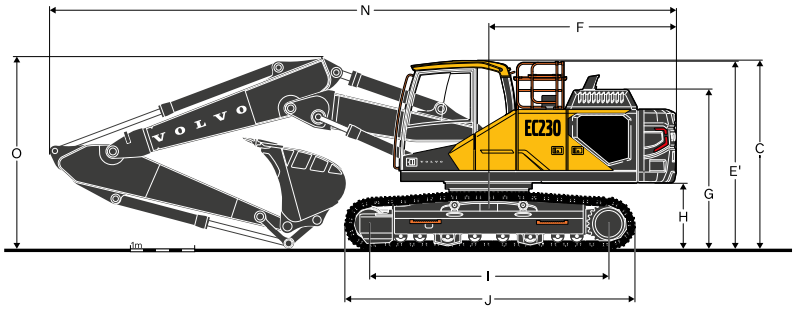

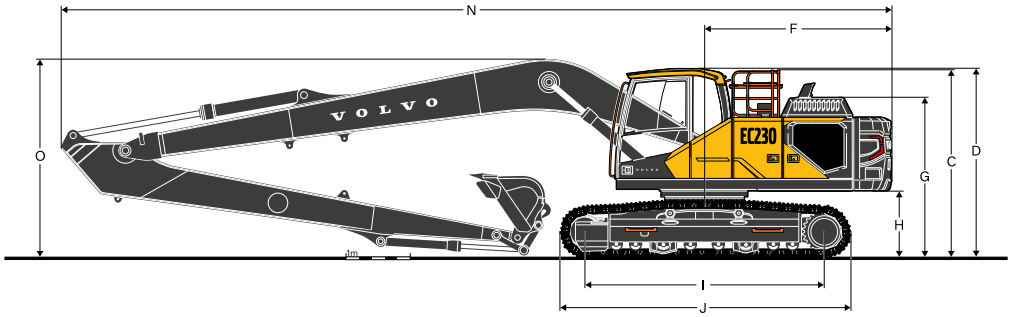

DIMENSIONS

	Unit	EC230F L				EC230F NL			
Boom	**m**	**5.7 / 5.57**				**5.7 / 5.57**			
Arm	**m**	**2.0**	**2.5**	**2.9**	**3.5**	**2.0**	**2.5**	**2.9**	**3.5**
A. Overall width of upper structure	mm	2 500	2 500	2 500	2 500	2 500	2 500	2 500	2 500
B. Overall width	mm	2 990	2 990	2 990	2 990	2 540	2 540	2 540	2 540
C. Overall height of cab	mm	2 900	2 900	2 900	2 900	2 900	2 900	2 900	2 900
D. Overall height of handrail	mm	2 875	2 875	2 875	2 875	2 875	2 875	2 875	2 875
E. Overall height of guardrail	mm	3 120	3 120	3 120	3 120	3 120	3 120	3 120	3 120
F. Tail swing radius	mm	2 870	2 870	2 870	2 870	2 870	2 870	2 870	2 870
G. Overall height of engine hood	mm	2 450	2 450	2 450	2 450	2450	2450	2450	2450
H. Counterweight clearance *	mm	1 005	1 005	1 005	1 005	1005	1005	1005	1005
I. Tumbler length	mm	3 660	3 660	3 660	3 660	3 660	3 660	3 660	3 660
J. Track length	mm	4 460	4 460	4 460	4 460	4 460	4 460	4 460	4 460
K. Track gauge	mm	2 390	2 390	2 390	2 390	2 040	2 040	2 040	2 040
L. Shoe width	mm	600	600	600	600	500	500	500	500
M. Min. ground clearance *	mm	455	455	455	455	455	455	455	455
N. Overall length	mm	9 830	9 770	9 715	9 765	9 830	9 770	9 715	9 765
N[1]. Overall length	mm	9 675	9 630	9 575	9 595	9 675	9 630	9 575	9 595
O. Overall height of boom	mm	3 155	3 175	3 035	3 170	3 155	3 175	3 035	3 170
O[1]. Overall height of boom	mm	3 065	3 050	2 955	3 285	3 065	3 050	2 955	3 285

* Without shoe grouser

[1] 2-piece boom

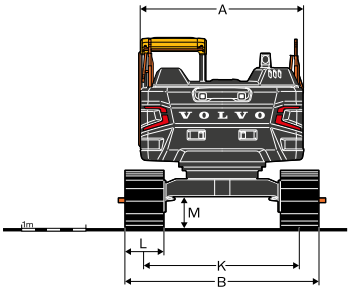

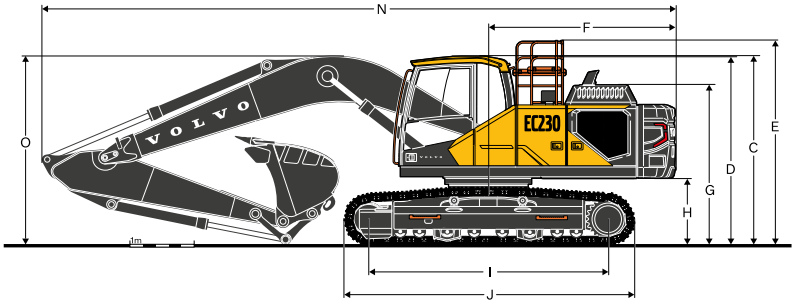

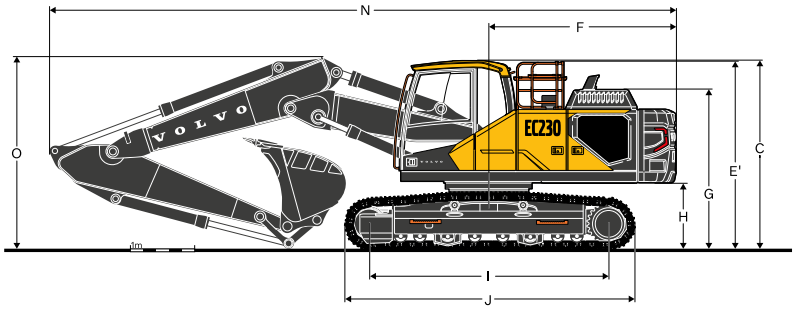

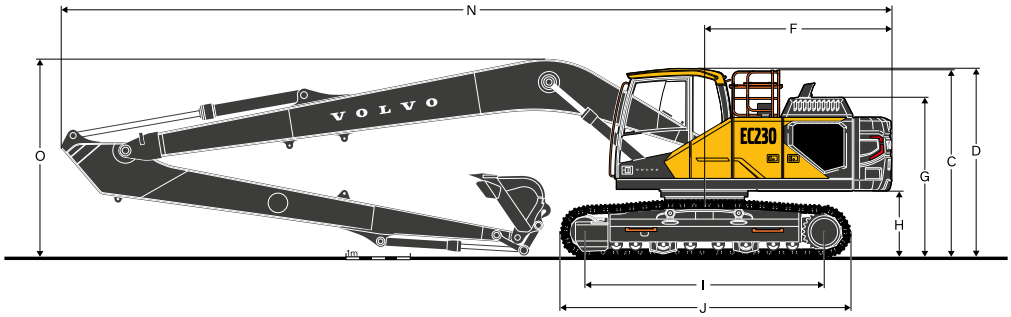

DIMENSIONS

	Unit	EC230F N				EC230F NH				EC230F LR
Boom	**m**	**5.7 / 5.57**				**5.7 / 5.57**				**8.85**
Arm	**m**	**2.0**	**2.5**	**2.9**	**3.5**	**2.0**	**2.5**	**2.9**	**3.5**	**6.25**
A. Overall width of upper structure	mm	2 500	2 500	2 500	2 500	2 500	2 500	2 500	2 500	2 500
B. Overall width	mm	2 800	2 800	2 800	2 800	2 540	2 540	2 540	2 540	3 190
C. Overall height of cab	mm	2 900	2 900	2 900	2 900	2 965	2 965	2 965	2 965	2 900
D. Overall height of handrail	mm	2 875	2 875	2 875	2 875	2 940	2 940	2 940	2 940	2 875
E. Overall height of guardrail	mm	3 120	3 120	3 120	3 120	3 185	3 185	3 185	3 185	3 120
F. Tail swing radius	mm	2 870	2 870	2 870	2 870	2 870	2 870	2 870	2 870	2 870
G. Overall height of engine hood	mm	2 450	2 450	2 450	2 450	2 515	2 515	2 515	2 515	2 450
H. Counterweight clearance *	mm	1 005	1 005	1 005	1 005	1 070	1 070	1 070	1 070	1 005
I. Tumbler length	mm	3 370	3 370	3 370	3 370	3 510	3 510	3 510	3 510	3 660
J. Track length	mm	4 160	4 160	4 160	4 160	4 360	4 360	4 360	4 360	4 460
K. Track gauge	mm	2 200	2 200	2 200	2 200	2 040	2 040	2 040	2 040	2 390
L. Shoe width	mm	600	600	600	600	500	500	500	500	800
M. Min. ground clearance *	mm	455	455	455	455	485	485	485	485	455
N. Overall length	mm	9 830	9 770	9 715	9 765	9 830	9 770	9 715	9 765	12 900
N[1]. Overall length	mm	9 675	9 630	9 575	9 595	9 675	9 630	9 575	9 595	
O. Overall height of boom	mm	3 155	3 175	3 035	3 170	3 220	3 240	3 100	3 235	3 090
O[1]. Overall height of boom	mm	3 065	3 050	2 955	3 285	3 130	3 115	3 020	3 350	

* Without shoe grouser

[1] 2-piece boom

Specifications

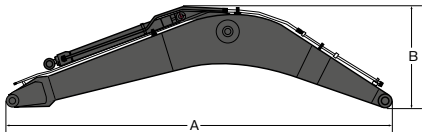

DIMENSIONS

Description	Unit	Boom			
	m	5.7 GP	5.7 HD	5.57 2-piece	8.85 LR
A. Length	mm	5 915	5 915	5 785	9 065
B. Height	mm	1 600	1 600	1 420	1 460
Width	mm	670	670	670	670
Weight	kg	2 010	2 155	2 640	2 560

* Includes cylinder, piping and pin, excludes boom cyl. Pin

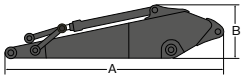

DIMENSIONS

Description	Unit	Arm					
	m	2.0 ME	2.5 HD	2.9 GP	2.9 HD	3.5 GP	6.25 LR
A. Length	mm	3 070	3 530	3 895	3 895	4 540	7 310
B. Height	mm	980	865	865	865	865	945
Width	mm	440	440	440	440	440	385
Weight	kg	1 080	1 135	1 140	1 190	1 165	1 255

* Includes cylinder, linkage and pin

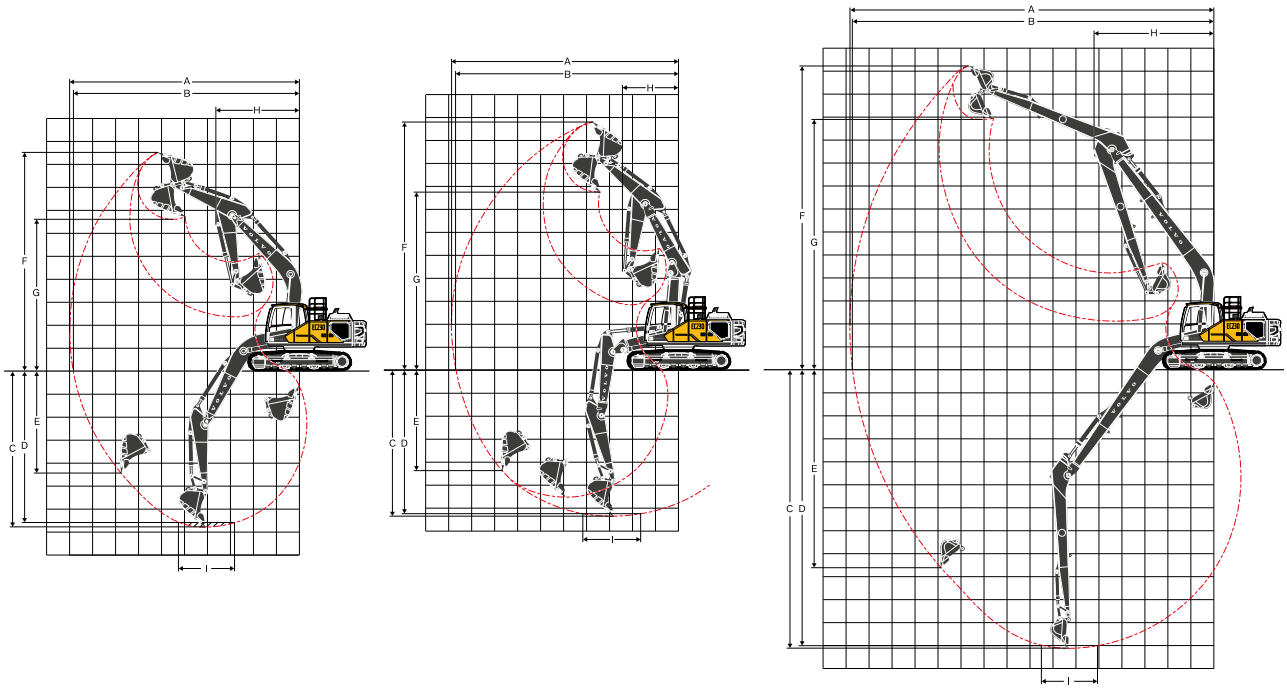

WORKING RANGES WITH DIRECT FIT BUCKET										
Description	**Unit**	**EC230F L, NL, N**								**EC230F LR**
Boom	**m**	**5.7**				**5.57**				**8.85**
Arm	**m**	**2.0**	**2.5**	**2.9**	**3.5**	**2.0**	**2.5**	**2.9**	**3.5**	**6.25**
A. Max. digging reach	mm	9 145	9 605	9 995	10 450	9 040	9 505	9 900	10 365	15 805
B. Max. digging reach on ground	mm	8 975	9 445	9 835	10 305	8 870	9 345	9 740	10 215	15 705
C. Max. digging depth	mm	5 925	6 425	6 825	7 425	5 505	5 995	6 400	6 945	12 140
D. Max.digging depth (I=2.44 m level)	mm	5 670	6 205	6 635	7 235	5 385	5 885	6 295	6 845	12 035
E. Max. vertical wall digging depth	mm	4 315	5 070	5 535	5 885	4 125	4 735	5 150	5 645	10 860
F. Max. cutting height	mm	8 925	9 205	9 445	9 450	10 015	10 395	10 715	10 930	13 260
G. Max. dumping height	mm	6 090	6 330	6 555	6 600	7 005	7 365	7 680	7 910	10 905
H. Min. front swing radius	mm	3 660	3 670	3 645	3 630	2 895	2 735	2 465	2 740	5 205
Description	**Unit**	**EC230F NH**								
Boom	**m**	**5.7**				**5.57**				
Arm	**m**	**2.0**	**2.5**	**2.9**	**3.5**	**2.0**	**2.5**	**2.9**	**3.5**	
A. Max. digging reach	mm	9 145	9 605	9 995	10 450	9 040	9 505	9 900	10 365	
B. Max. digging reach on ground	mm	8 960	9 430	9 825	10 290	8 855	9 330	9 730	10 205	
C. Max. digging depth	mm	5 860	6 360	6 760	7 360	5 440	5 930	6 335	6 880	
D. Max.digging depth (I=2.44 m level)	mm	5 605	6 140	6 570	7 170	5 320	5 820	6 230	6 780	
E. Max. vertical wall digging depth	mm	4 250	5 005	5 600	5 820	4 060	4 670	5 085	5 580	
F. Max. cutting height	mm	8 990	9 270	9 510	9 515	10 080	10 460	10 780	10 995	
G. Max. dumping height	mm	6 155	6 395	6 620	6 665	7 070	7 430	7 745	7 975	
H. Min. front swing radius	mm	3 660	3 670	3 645	3 630	2 895	2 735	2 465	2 740	

DIGGING FORCES WITH DIRECT FIT BUCKET											
Bucket radius			mm	1 528	1 528	1 528	1 528	1 528	1 528	1 528	1 528	1 250
Breakout force (bucket)	Normal	SAE J1179	kN	146	125	125	125	146	125	125	125	68
	Power boost	SAE J1179	kN	154	132	132	132	154	132	132	132	-
	Normal	ISO 6015	kN	165	141	141	141	165	141	141	141	77
	Power boost	ISO 6015	kN	174	149	149	149	174	149	149	149	-
Tearout force (arm)	Normal	SAE J1179	kN	144	117	101	92	144	117	101	92	44
	Power boost	SAE J1179	kN	153	124	107	97	153	124	107	97	-
	Normal	ISO 6015	kN	149	121	104	94	149	121	104	94	45
	Power boost	ISO 6015	kN	158	128	110	99	158	128	110	99	-
Rotation angle, bucket			°	166	175	175	175	166	175	175	175	178

Specifications

GROUND PRESSURE

EC230F L

Description	Shoe width	Operating weight	Ground pressure	Overall width	Operating weight	Ground pressure	Overall width
	mm	kg	kPa	mm	kg	kPa	mm
Triple grouser	500	23 510	58.8	2 890	24 140	59.8	2 890
	600	23 760	49.0	2 990	24 400	51.0	2 990
	600 (HD)	23 930	50.0	2 990	24 560	51.0	2 990
	700	24 220	43.1	3 090	24 850	44.1	3 090
	800	24 510	38.2	3 190	25 140	39.2	3 190
	900	24 790	34.3	3 290	25 420	35.3	3 290
Single grouser	600	23 900	50.0	2 990	24 530	51.0	2 990
Double grouser	700	24 480	43.1	3 090	25 110	45.1	3 090
		EC230F L, 5.7 m GP boom, 2.9 m GP arm, 1 036 kg bucket, 5 400 kg counterweight			**EC230F L, 5.57 m 2-pieces boom, 2.9 m GP arm, 1 036 kg bucket, 5 400 kg counterweight**		

EC230F NL

Description	Shoe width	Operating weight	Ground pressure	Overall width	Operating weight	Ground pressure	Overall width
	mm	kg	kPa	mm	kg	kPa	mm
Triple grouser	500	23 390	57.9	2 540	24 020	59.8	2 540
	600	23 650	49.0	2 640	24 280	50.0	2 640
	600 (HD)	23 810	49.0	2 640	24 450	51.0	2 640
	700	24 100	43.1	2 740	24 740	44.1	2 740
Double grouser	700	24 360	43.1	2 740	25 000	44.1	2 740
		EC230F NL, 5.7 m GP boom, 2.9 m GP arm, 1 036 kg bucket, 5 400 kg counterweight			**EC230F NL, 5.57 m 2-pieces boom, 2.9 m GP arm, 1 036 kg bucket, 5 400 kg counterweight**		

EC230F N

Description	Shoe width	Operating weight	Ground pressure	Overall width	Operating weight	Ground pressure	Overall width
	mm	kg	kPa	mm	kg	kPa	mm
Triple grouser	600	23 380	52.0	2 800	24 010	53.9	2 800
	600 (HD)	23 530	53.0	2 800	24 170	53.9	2 800
	700	23 800	46.1	2 900	24 440	47.1	2 900
	800	24 070	40.2	3 000	24 700	41.2	3 000
	900	24 340	36.3	3 100	24 970	37.3	3 100
		EC230F N, 5.7 m GP boom, 2.9 m GP arm, 1 036 kg bucket, 5 400 kg counterweight			**EC230F N, 5.57 m 2-pieces boom, 2.9 m GP arm, 1 036 kg bucket, 5 400 kg counterweight**		

EC230F NH

Description	Shoe width	Operating weight	Ground pressure	Overall width	Operating weight	Ground pressure	Overall width
	mm	kg	kPa	mm	kg	kPa	mm
Triple grouser	500	24 100	64.7	2 540	24 730	66.7	2 540
	600	24 400	54.9	2 640	25 030	55.9	2 640
	700	24 930	48.0	2 740	25 560	49.0	2 740
		EC230F NH, 5.7 m GP boom, 2.9 m GP arm, 1 036 kg bucket, 5 400 kg counterweight			**EC230F NH, 5.57 m 2-pieces boom, 2.9 m GP arm, 1 036 kg bucket, 5 400 kg counterweight**		

EC230F LR

Description	Shoe width	Operating weight	Ground pressure	Overall width
	mm	kg	kPa	mm
Triple grouser	800	24 700	38.2	3 190
	900	24 980	34.3	3 290
		EC230F LR, 8.85 m LR boom, 6.25 m LR arm, 452 kg bucket, 5 400 kg counterweight		

BUCKET SELECTION GUIDE

EC230F L with 600 mm shoe, 4 600 kg counterweight

Bucket Type		Capacity	Cutting width	Weight	Teeth	Recommended maximum material density (kg/m³)			
						5.7 m GP Boom			
		L	mm	kg	EA	H2.5 m Arm	G2.9 m Arm	H2.9 m Arm	G3.5 m Arm
Direct fit Buckets	GP	480	600	666	3	C	C	C	C
		630	800	703	4	C	C	C	C
		750	900	749	4	C	C	C	C
		920	1 050	862	4	C	C	C	C
		1 090	1 200	908	5	C	C	C	C
		1 320	1 420	1 041	5	C	C	C	C
		1 440	1 500	1 085	6	C	C	C	B

Bucket Type		Capacity	Cutting width	Weight	Teeth	Recommended maximum material density (kg/m³)			
						5.57 m VA Boom			
		L	mm	kg	EA	H2.5 m Arm	G2.9 m Arm	H2.9 m Arm	G3.5 m Arm
Direct fit Buckets	GP	480	600	666	3	C	C	C	C
		630	800	703	4	C	C	C	C
		750	900	749	4	C	C	C	C
		920	1 050	862	4	C	C	C	C
		1 090	1 200	908	5	C	C	C	C
		1 320	1 420	1 041	5	C	C	C	C
		1 440	1 500	1 085	6	C	C	C	B

EC230F N with 600 mm shoe, 4 600 kg counterweight

Bucket Type		Capacity	Cutting width	Weight	Teeth	Recommended maximum material density (kg/m³)			
						5.7 m GP Boom			
		L	mm	kg	EA	H2.5 m Arm	G2.9 m Arm	H2.9 m Arm	G3.5 m Arm
Direct fit Buckets	GP	480	600	666	3	C	C	C	C
		630	800	703	4	C	C	C	C
		750	900	749	4	C	C	C	C
		920	1 050	862	4	C	C	C	C
		1 090	1 200	908	5	C	C	C	C
		1 320	1 420	1 041	5	C	C	C	B
		1 440	1 500	1 085	6	C	B	B	B

Bucket Type		Capacity	Cutting width	Weight	Teeth	Recommended maximum material density (kg/m³)			
						5.57 m VA Boom			
		L	mm	kg	EA	H2.5 m Arm	G2.9 m Arm	H2.9 m Arm	G3.5 m Arm
Direct fit Buckets	GP	480	600	666	3	C	C	C	C
		630	800	703	4	C	C	C	C
		750	900	749	4	C	C	C	C
		920	1 050	862	4	C	C	C	C
		1 090	1 200	908	5	C	C	C	C
		1 320	1 420	1 041	5	C	C	C	B
		1 440	1 500	1 085	6	C	B	B	A

Please consult with your Volvo dealer for the proper match of buckets and attachments to suit the application.
The recommendations are given as a guide only, based on typical operation conditions.
Bucket capacity based on ISO 7451, heaped material with a 1:1 angle of repose.

Maximum material density
D: 2 100 kg/m³
C: 1 800 kg/m³
B: 1 500 kg/m³
A: 1 200 kg/m³
X : Not recommended

Specifications

BUCKET SELECTION GUIDE

EC230F NL with 600 mm shoe, 5 400 kg counterweight

Bucket Type		Capacity	Cutting width	Weight	Teeth	Recommended maximum material density (kg/m³)			
						5.7 m GP Boom			
		L	mm	kg	EA	H2.5 m Arm	G2.9 m Arm	H2.9 m Arm	G3.5 m Arm
Direct fit Buckets	GP	480	600	666	3	C	C	C	C
		630	800	703	4	C	C	C	C
		750	900	749	4	C	C	C	C
		920	1 050	862	4	C	C	C	C
		1 090	1 200	908	5	C	C	C	C
		1 320	1 420	1 041	5	C	C	C	B
		1 440	1 500	1 085	6	C	C	B	B

Bucket Type		Capacity	Cutting width	Weight	Teeth	Recommended maximum material density (kg/m³)			
						5.57 m VA Boom			
		L	mm	kg	EA	H2.5 m Arm	G2.9 m Arm	H2.9 m Arm	G3.5 m Arm
Direct fit Buckets	GP	480	600	666	3	C	C	C	C
		630	800	703	4	C	C	C	C
		750	900	749	4	C	C	C	C
		920	1 050	862	4	C	C	C	C
		1 090	1 200	908	5	C	C	C	C
		1 320	1 420	1 041	5	C	C	C	B
		1 440	1 500	1 085	6	C	C	B	B

EC230F NH with 600 mm shoe, 5 400 kg counterweight

Bucket Type		Capacity	Cutting width	Weight	Teeth	Recommended maximum material density (kg/m³)			
						5.7 m GP Boom			
		L	mm	kg	EA	H2.5 m Arm	G2.9 m Arm	H2.9 m Arm	G3.5 m Arm
Direct fit Buckets	GP	480	600	666	3	C	C	C	C
		630	800	703	4	C	C	C	C
		750	900	749	4	C	C	C	C
		920	1 050	862	4	C	C	C	C
		1 090	1 200	908	5	C	C	C	C
		1 320	1 420	1 041	5	C	C	C	C
		1 440	1 500	1 085	6	C	C	C	B

Bucket Type		Capacity	Cutting width	Weight	Teeth	Recommended maximum material density (kg/m³)			
						5.57 m VA Boom			
		L	mm	kg	EA	H2.5 m Arm	G2.9 m Arm	H2.9 m Arm	G3.5 m Arm
Direct fit Buckets	GP	480	600	666	3	C	C	C	C
		630	800	703	4	C	C	C	C
		750	900	749	4	C	C	C	C
		920	1 050	862	4	C	C	C	C
		1 090	1 200	908	5	C	C	C	C
		1 320	1 420	1 041	5	C	C	C	C
		1 440	1 500	1 085	6	C	C	C	B

Please consult with your Volvo dealer for the proper match of buckets and attachments to suit the application.
The recommendations are given as a guide only, based on typical operation conditions.
Bucket capacity based on ISO 7451, heaped material with a 1:1 angle of repose.

Maximum material density
D: 2 100 kg/m³
C: 1 800 kg/m³
B: 1 500 kg/m³
A: 1 200 kg/m³
X : Not recommended

LIFTING CAPACITY EC230F L

Lifting capacity at the arm end without bucket.
For lifting capacity including bucket, simply subtract actual weight of the direct fit bucket or the bucket with quick coupler from the following values.

	Lifting hook related to ground level		1.5 m		3.0 m		4.5 m		6.0 m		7.5 m		Max. reach		Max.
			Along UC	Across UC	Along UC	Across UC	Along UC	Across UC	Along UC	Across UC	Along UC	Across UC	Along UC	Across UC	m
Boom : 5.57 m 2-pieces Arm : 2.0 m Shoe : 600 mm CWT : 5 400 kg	7.5 m	kg					*8 620	*8 620					*8 500	*8 500	4.8
	6.0 m	kg					*8 590	*8 590	*7 480	6 100			*7 420	5 810	6.2
	4.5 m	kg					*9 570	9 250	*7 680	5 960			*6 980	4 690	7.0
	3.0 m	kg					*10 890	8 600	*8 140	5 710			6 410	4 190	7.4
	1.5 m	kg							*8 420	5 480	6 200	4 030	6 190	4 020	7.5
	0 m	kg					*10 890	7 970	*8 180	5 350			*6 330	4 140	7.3
	-1.5 m	kg					*9 390	8 000	*7 140	5 350			*5 900	4 610	6.7
	-3.0 m	kg					*6 730	*6 730							5.8
Boom : 5.57 m 2-pieces Arm : 2.5 m Shoe : 600 mm CWT : 5 400 kg	7.5 m	kg					*7 860	*7 860					*6 840	*6 840	5.5
	6.0 m	kg					*8 000	*8 000	*7 030	6 240			*6 260	5 140	6.7
	4.5 m	kg			*12 670	*12 670	*9 030	*9 030	*7 360	6 070			*6 130	4 270	7.5
	3.0 m	kg					*10 470	8 820	*7 930	5 810	6 360	4 170	5 880	3 860	7.9
	1.5 m	kg					*11 410	8 270	*8 360	5 540	6 230	4 060	5 690	3 720	8.0
	0 m	kg					*11 250	8 010	*8 330	5 380	6 150	3 980	5 850	3 800	7.8
	-1.5 m	kg			*11 440	*11 440	*10 090	7 980	*7 610	5 330			*5 710	4 160	7.3
	-3.0 m	kg					*7 860	*7 860	*5 700	5 430			*5 030	*5 030	6.4
Boom : 5.57 m 2-pieces Arm : 2.9 m GP Shoe : 600 mm CWT : 5 400 kg	9.0 m	kg											*6 200	*6 200	4.0
	7.5 m	kg					*7 080	*7 080	*5 130	*5 130			*5 000	*5 000	6.0
	6.0 m	kg					*7 140	*7 140	*6 710	6 370			*4 620	*4 620	7.2
	4.5 m	kg			*9 120	*9 120	*8 590	*8 590	*7 110	6 190	*6 260	4 350	*4 530	3 980	7.9
	3.0 m	kg					*10 100	9 020	*7 750	5 910	6 430	4 240	*4 630	3 630	8.3
	1.5 m	kg					*11 270	8 410	*8 280	5 620	6 290	4 110	*4 910	3 510	8.4
	0 m	kg			*5 950	*5 950	*11 420	8 070	*8 410	5 420	6 180	4 010	*5 450	3 570	8.2
	-1.5 m	kg			*10 840	*10 840	*10 550	7 990	*7 900	5 340	*5 830	3 990	*5 520	3 870	7.7
	-3.0 m	kg			*11 020	*11 020	*8 640	8 080	*6 420	5 400			*5 020	4 580	6.8
Boom : 5.7 m GP Arm : 2.5 m HD Shoe : 600 mm CWT : 5 400 kg	7.5 m	kg											*5 680	*5 680	5.6
	6.0 m	kg							*5 500	*5 500			*5 600	5 050	6.8
	4.5 m	kg					*6 970	*6 970	*6 010	*6 010	*5 680	4 320	*5 690	4 240	7.6
	3.0 m	kg					*8 970	8 830	*6 880	5 840	*5 980	4 230	5 790	3 850	8.0
	1.5 m	kg					*10 730	8 340	*7 780	5 600	6 250	4 120	5 610	3 710	8.1
	0 m	kg					*11 530	8 120	*8 370	5 450	6 170	4 040	5 760	3 790	7.9
	-1.5 m	kg			*10 800	*10 800	*11 460	8 090	*8 460	5 400			6 320	4 130	7.4
	-3.0 m	kg			*14 740	*14 740	*10 550	8 190	*7 780	5 480			*6 990	4 970	6.5
	-4.5 m	kg			*11 410	*11 410	*8 150	*8 150					*7 140	*7 140	5.0
Boom : 5.7 m GP Arm : 2.9 m GP Shoe : 600 mm CWT : 5 400 kg	7.5 m	kg							*5 210	*5 210			*4 970	*4 970	6.2
	6.0 m	kg							*5 100	*5 100			*4 630	4 630	7.3
	4.5 m	kg							*5 670	*5 670	*5 360	4 400	*4 580	3 960	8.0
	3.0 m	kg					*8 430	*8 430	*6 590	5 940	*5 760	4 290	*4 700	3 630	8.4
	1.5 m	kg					*10 340	8 470	*7 560	5 680	*6 240	4 160	*5 020	3 510	8.5
	0 m	kg			*5 430	*5 430	*11 400	8 170	*8 270	5 500	6 200	4 070	5 400	3 570	8.3
	-1.5 m	kg	*6 280	*6 280	*10 320	*10 320	*11 570	8 090	8 490	5 420	6 160	4 040	5 850	3 850	7.8
	-3.0 m	kg	*11 380	*11 380	*15 630	*15 630	*10 920	8 160	*8 090	5 460			*6 660	4 520	7.0
	-4.5 m	kg			*12 740	*12 740	*9 070	8 390					*6 930	6 210	5.6
Boom : 5.7 m GP Arm : 3.5 m GP Shoe : 600 mm CWT : 5 400 kg	7.5 m	kg											*4 250	*4 250	6.8
	6.0 m	kg									*4 610	4 480	*4 040	*4 040	7.8
	4.5 m	kg							*5 010	*5 010	*4 820	4 410	*4 020	3 600	8.5
	3.0 m	kg			*11 270	*11 270	*7 410	*7 410	*5 980	5 970	*5 300	4 270	*4 150	3 310	8.8
	1.5 m	kg					*9 520	8 550	*7 050	5 680	*5 860	4 130	*4 450	3 190	8.9
	0 m	kg			*7 050	*7 050	*10 940	8 160	*7 910	5 450	6 140	4 000	4 920	3 230	8.7
	-1.5 m	kg	*6 210	*6 210	*10 310	*10 310	*11 470	8 000	*8 360	5 330	6 060	3 940	5 270	3 450	8.3
	-3.0 m	kg	*10 120	*10 120	*15 210	*15 210	*11 190	8 010	*8 240	5 320	6 090	3 960	6 080	3 960	7.5
	-4.5 m	kg	*15 160	*15 160	*14 260	*14 260	*9 910	8 160	*7 170	5 440			*6 700	5 140	6.3

Notes: 1. Machine in “Fine Mode-F” (Power Boost) for lifting capacities. 2. The above loads are in compliance with SAE J1097 and ISO 10567 Hydraulic Excavator Lifting Capacity Standards. 3. Rated loads do not exceed 87% of hydraulic lifting capacity or 75% of tipping load. 4. Rated loads marked with an asterisk (*) are limited by hydraulic capacity rather than tipping load.

Specifications

LIFTING CAPACITY EC230F N

Lifting capacity at the arm end without bucket.
For lifting capacity including bucket, simply subtract actual weight of the direct fit bucket or the bucket with quick coupler from the following values.

	Lifting hook related to ground level		1.5 m		3.0 m		4.5 m		6.0 m		7.5 m		Max. reach		Max.
			Along UC	Across UC	Along UC	Across UC	Along UC	Across UC	Along UC	Across UC	Along UC	Across UC	Along UC	Across UC	m
Boom : 5.57 m 2-pieces Arm : 2.0 m ME Shoe : 600 mm CWT : 5 400 kg	7.5 m	kg					*8 620	*8 620					*8 500	8 100	4.8
	6.0 m	kg					*8 590	*8 590	*7 480	5 550			*7 420	5 290	6.2
	4.5 m	kg					*9 570	8 380	*7 680	5 430			6 400	4 260	7.0
	3.0 m	kg					*10 890	7 750	7 910	5 180			5 740	3 800	7.4
	1.5 m	kg							7 660	4 950	5 550	3 650	5 540	3 640	7.5
	0 m	kg					*10 890	7 130	7 520	4 820			5 710	3 740	7.3
	-1.5 m	kg					*9 390	7 160	*7 140	4 820			*5 900	4 170	6.7
	-3.0 m	kg					*6 730	*6 730							5.8
Boom : 5.57 m 2-pieces Arm : 2.5 m HD Shoe : 600 mm CWT : 5 400 kg	7.5 m	kg					*7 860	*7 860					*6 840	6 590	5.5
	6.0 m	kg					*8 000	*8 000	*7 030	5 700			*6 260	4 690	6.7
	4.5 m	kg			*12 670	*12 670	*9 030	8 590	*7 360	5 530			5 810	3 890	7.5
	3.0 m	kg					*10 470	7 950	*7 930	5 270	5 700	3 790	5 270	3 510	7.9
	1.5 m	kg					*11 410	7 420	7 730	5 010	5 580	3 680	5 100	3 370	8.0
	0 m	kg					*11 250	7 170	7 540	4 850	5 500	3 600	5 230	3 440	7.8
	-1.5 m	kg			*11 440	*11 440	*10 090	7 140	7 490	4 800			*5 710	3 770	7.3
	-3.0 m	kg					*7 860	7 270	*5 700	4 910			*5 030	4 580	6.4
Boom : 5.57 m 2-pieces Arm : 2.9 m GP Shoe : 600 mm CWT : 5 400 kg	9.0 m	kg											*6 200	*6 200	4.0
	7.5 m	kg					*7 080	*7 080	*5 130	*5 130			*5 000	*5 000	6.0
	6.0 m	kg					*7 140	*7 140	*6 710	5 820			*4 620	4 290	7.2
	4.5 m	kg			*9 120	*9 120	*8 590	*8 590	*7 110	5 650	5 890	3 970	*4 530	3 630	7.9
	3.0 m	kg					*10 100	8 150	*7 750	5 370	5 770	3 860	*4 630	3 300	8.3
	1.5 m	kg					*11 270	7 560	7 820	5 090	5 630	3 730	4 790	3 180	8.4
	0 m	kg			*5 950	*5 950	*11 420	7 230	7 600	4 900	5 520	3 630	4 900	3 230	8.2
	-1.5 m	kg			*10 840	*10 840	*10 550	7 150	7 510	4 820	5 500	3 610	5 320	3 500	7.7
	-3.0 m	kg			*11 020	*11 020	*8 640	7 230	*6 420	4 870			*5 020	4 140	6.8
Boom : 5.7 m GP Arm : 2.5 m HD Shoe : 600 mm CWT : 5 400 kg	7.5 m	kg											*5 680	*5 680	5.6
	6.0 m	kg							*5 500	*5 500			*5 600	4 620	6.8
	4.5 m	kg					*6 970	*6 970	*6 010	5 560	*5 680	3 940	*5 690	3 870	7.6
	3.0 m	kg					*8 970	7 980	*6 880	5 320	5 720	3 850	5 210	3 500	8.0
	1.5 m	kg					*10 730	7 500	7 750	5 080	5 610	3 740	5 040	3 370	8.1
	0 m	kg					*11 530	7 290	7 580	4 930	5 530	3 670	5 170	3 440	7.9
	-1.5 m	kg			*10 800	*10 800	*11 460	7 260	7 530	4 880			5 660	3 750	7.4
	-3.0 m	kg			*14 740	14 000	*10 550	7 360	7 610	4 960			6 850	4 510	6.5
	-4.5 m	kg			*11 410	*11 410	*8 150	7 640					*7 140	6 650	5.0
Boom : 5.7 m GP Arm : 2.9 m GP Shoe : 600 mm CWT : 5 400 kg	7.5 m	kg							*5 210	*5 210			*4 970	*4 970	6.2
	6.0 m	kg							*5 100	*5 100			*4 630	4 230	7.3
	4.5 m	kg							*5 670	5 660	*5 360	4 020	*4 580	3 610	8.0
	3.0 m	kg					*8 430	8 160	*6 590	5 410	*5 760	3 910	*4 700	3 300	8.4
	1.5 m	kg					*10 340	7 630	*7 560	5 150	5 660	3 790	4 750	3 190	8.5
	0 m	kg			*5 430	*5 430	*11 400	7 340	7 630	4 970	5 550	3 690	4 850	3 240	8.3
	-1.5 m	kg	*6 280	*6 280	*10 320	*10 320	*11 570	7 260	7 550	4 900	5 520	3 660	5 250	3 490	7.8
	-3.0 m	kg	*11 380	*11 380	*15 630	13 880	*10 920	7 330	7 590	4 940			6 190	4 100	7.0
	-4.5 m	kg			*12 740	*12 740	*9 070	7 560					*6 930	5 630	5.6
Boom : 5.7 m GP Arm : 3.5 m GP Shoe : 600 mm CWT : 5 400 kg	7.5 m	kg											*4 250	*4 250	6.8
	6.0 m	kg									*4 610	4 090	*4 040	3 800	7.8
	4.5 m	kg							*5 010	*5 010	*4 820	4 030	*4 020	3 280	8.5
	3.0 m	kg			*11 270	*11 270	*7 410	*7 410	*5 980	5 430	*5 300	3 890	*4 150	3 010	8.8
	1.5 m	kg					*9 520	7 710	*7 050	5 150	5 620	3 750	4 340	2 900	8.9
	0 m	kg			*7 050	*7 050	*10 940	7 320	7 590	4 930	5 490	3 630	4 410	2 930	8.7
	-1.5 m	kg	*6 210	*6 210	*10 310	*10 310	*11 470	7 170	7 460	4 810	5 420	3 560	4 720	3 120	8.3
	-3.0 m	kg	*10 120	*10 120	*15 210	13 610	*11 190	7 180	7 450	4 800	5 450	3 590	5 440	3 580	7.5
	-4.5 m	kg	*15 160	*15 160	*14 260	13 930	*9 910	7 330	*7 170	4 920			*6 700	4 650	6.3

Notes: 1. Machine in “Fine Mode-F” (Power Boost) for lifting capacities. 2. The above loads are in compliance with SAE J1097 and ISO 10567 Hydraulic Excavator Lifting Capacity Standards. 3. Rated loads do not exceed 87% of hydraulic lifting capacity or 75% of tipping load. 4. Rated loads marked with an asterisk (*) are limited by hydraulic capacity rather than tipping load.

LIFTING CAPACITY EC230F NL

Lifting capacity at the arm end without bucket.
For lifting capacity including bucket, simply subtract actual weight of the direct fit bucket or the bucket with quick coupler from the following values.

	Lifting hook related to ground level		1.5 m		3.0 m		4.5 m		6.0 m		7.5 m		Max. reach		Max.
			Along UC	Across UC	Along UC	Across UC	Along UC	Across UC	Along UC	Across UC	Along UC	Across UC	Along UC	Across UC	m
Boom : 5.7 m HD Arm : 2.0 m ME Shoe : 500 mm CWT : 5 400 kg	7.5 m	kg											*6 290	*6 290	4.9
	6.0 m	kg							*6 030	5 240			*6 070	4 840	6.3
	4.5 m	kg					*7 640	*7 640	*6 410	5 100			*6 110	3 940	7.1
	3.0 m	kg					*9 600	7 190	*7 210	4 860	6 240	3 530	6 230	3 520	7.5
	1.5 m	kg							*7 990	4 650	6 150	3 440	6 020	3 370	7.6
	0 m	kg					*11 520	6 650	8 390	4 530			6 210	3 450	7.4
	-1.5 m	kg					*11 140	6 670	*8 300	4 520			6 930	3 820	6.9
	-3.0 m	kg			*13 310	12 800	*9 900	6 820					*7 330	4 770	5.9
Boom : 5.7 m HD Arm : 2.5 m HD Shoe : 500 mm CWT : 5 400 kg	7.5 m	kg											*5 660	*5 660	5.6
	6.0 m	kg							*5 480	5 360			*5 580	4 310	6.8
	4.5 m	kg					*6 950	*6 950	*5 980	5 190	*5 650	3 670	*5 660	3 600	7.6
	3.0 m	kg					*8 930	7 390	*6 850	4 950	*5 950	3 580	5 730	3 250	8.0
	1.5 m	kg					*10 680	6 900	*7 740	4 710	6 180	3 470	5 550	3 130	8.1
	0 m	kg					*11 470	6 690	*8 330	4 550	6 090	3 390	5 690	3 180	7.9
	-1.5 m	kg			*10 800	*10 800	*11 390	6 660	8 370	4 500			6 240	3 470	7.4
	-3.0 m	kg			*14 650	12 640	*10 480	6 760	*7 740	4 580			*6 950	4 170	6.5
	-4.5 m	kg			*11 320	*11 320	*8 100	7 040					*7 090	6 140	5.0
Boom : 5.7 m HD Arm : 2.9 m GP Shoe : 500 mm CWT : 5 400 kg	7.5 m	kg							*5 190	*5 190			*4 970	*4 970	6.2
	6.0 m	kg							*5 080	*5 080			*4 630	3 960	7.3
	4.5 m	kg							*5 650	5 300	*5 340	3 750	*4 580	3 370	8.0
	3.0 m	kg					*8 390	7 570	*6 570	5 040	*5 730	3 640	*4 700	3 070	8.4
	1.5 m	kg					*10 290	7 030	*7 520	4 780	*6 210	3 520	*5 020	2 950	8.5
	0 m	kg			*5 430	*5 430	*11 340	6 740	*8 220	4 600	6 120	3 420	5 330	3 000	8.3
	-1.5 m	kg	*6 280	*6 280	*10 320	*10 320	*11 510	6 660	8 390	4 520	6 090	3 390	5 780	3 230	7.8
	-3.0 m	kg	*11 380	*11 380	*15 540	12 530	*10 860	6 730	*8 050	4 560			*6 620	3 790	7.0
	-4.5 m	kg			*12 660	*12 660	*9 010	6 950					*6 880	5 210	5.6
Boom : 5.7 m HD Arm : 2.9 m HD Shoe : 500 mm CWT : 5 400 kg	7.5 m	kg							*5 170	*5 170			*4 960	*4 960	6.2
	6.0 m	kg							*5 060	*5 060			*4 630	3 940	7.3
	4.5 m	kg							*5 620	5 270	*5 310	3 730	*4 570	3 340	8.0
	3.0 m	kg					*8 350	7 530	*6 530	5 010	*5 700	3 610	*4 690	3 040	8.4
	1.5 m	kg					*10 240	6 980	*7 480	4 750	*6 180	3 490	*5 010	2 930	8.5
	0 m	kg			*5 420	*5 420	*11 290	6 690	*8 180	4 560	6 090	3 390	5 300	2 970	8.3
	-1.5 m	kg	*6 270	*6 270	*10 310	*10 310	*11 450	6 610	8 350	4 480	6 060	3 360	5 750	3 200	7.8
	-3.0 m	kg	*11 370	*11 370	*15 470	12 450	*10 810	6 680	*8 010	4 520			*6 590	3 760	7.0
	-4.5 m	kg			*12 600	*12 600	*8 970	6 910					*6 840	5 170	5.6
Boom : 5.7 m HD Arm : 3.5 m GP Shoe : 500 mm CWT : 5 400 kg	7.5 m	kg											*4 250	*4 250	6.8
	6.0 m	kg									*4 590	3 830	*4 040	3 550	7.8
	4.5 m	kg							*4 990	*4 990	*4 800	3 760	*4 020	3 050	8.5
	3.0 m	kg			*11 230	*11 230	*7 390	*7 390	*5 960	5 070	*5 270	3 630	*4 150	2 790	8.8
	1.5 m	kg					*9 480	7 110	*7 010	4 780	*5 830	3 480	*4 450	2 680	8.9
	0 m	kg			*7 050	*7 050	*10 880	6 720	*7 870	4 550	6 060	3 350	4 860	2 700	8.7
	-1.5 m	kg	*6 210	*6 210	*10 310	*10 310	*11 410	6 560	8 300	4 430	5 990	3 290	5 200	2 880	8.3
	-3.0 m	kg	*10 120	*10 120	*15 210	12 260	*11 120	6 570	*8 200	4 420	6 010	3 310	6 000	3 310	7.5
	-4.5 m	kg	*15 160	*15 160	*14 170	12 570	*9 850	6 720	*7 120	4 540			*6 660	4 300	6.3
Boom : 5.7 m HD Arm : 2.0 m ME Shoe : 600 mm CWT : 5 400 kg	7.5 m	kg											*6 290	*6 290	4.9
	6.0 m	kg							*6 030	5 290			*6 070	4 880	6.3
	4.5 m	kg					*7 640	*7 640	*6 410	5 140			*6 110	3 970	7.1
	3.0 m	kg					*9 600	7 260	*7 210	4 910	*6 260	3 560	*6 260	3 550	7.5
	1.5 m	kg							*7 990	4 690	6 210	3 480	6 080	3 410	7.6
	0 m	kg					*11 520	6 710	*8 420	4 570			6 280	3 490	7.4
	-1.5 m	kg					*11 140	6 730	*8 300	4 560			7 000	3 860	6.9
	-3.0 m	kg			*13 310	12 910	*9 900	6 880					*7 330	4 820	5.9

Notes: 1. Machine in “Fine Mode-F” (Power Boost) for lifting capacities. 2. The above loads are in compliance with SAE J1097 and ISO 10567 Hydraulic Excavator Lifting Capacity Standards. 3. Rated loads do not exceed 87% of hydraulic lifting capacity or 75% of tipping load. 4. Rated loads marked with an asterisk (*) are limited by hydraulic capacity rather than tipping load.

Specifications

LIFTING CAPACITY EC230F NH

Lifting capacity at the arm end without bucket.
For lifting capacity including bucket, simply subtract actual weight of the direct fit bucket or the bucket with quick coupler from the following values.

	Lifting hook related to ground level		1.5 m		3.0 m		4.5 m		6.0 m		7.5 m		Max. reach		Max.
			Along UC	Across UC	Along UC	Across UC	Along UC	Across UC	Along UC	Across UC	Along UC	Across UC	Along UC	Across UC	m
Boom : 5.57 m 2-pieces Arm : 2.0 m ME Shoe : 500 mm CWT : 5 400 kg	7.5 m	kg					*8 620	8 520					*8 500	7 770	4.8
	6.0 m	kg					*8 590	8 470	*7 480	5 350			*7 420	5 100	6.2
	4.5 m	kg					*9 570	8 020	*7 680	5 220			6 870	4 110	7.0
	3.0 m	kg					*10 890	7 400	*8 140	4 980			6 160	3 660	7.4
	1.5 m	kg							8 250	4 760	5 960	3 510	5 950	3 510	7.5
	0 m	kg					*10 890	6 800	8 110	4 630			6 140	3 600	7.3
	-1.5 m	kg					*9 390	6 830	*7 140	4 630			*5 900	4 010	6.7
	-3.0 m	kg					*6 730	*6 730							5.8
Boom : 5.57 m 2-pieces Arm : 2.5 m HD Shoe : 500 mm CWT : 5 400 kg	7.5 m	kg					*7 860	*7 860					*6 840	6 340	5.5
	6.0 m	kg					*8 000	*8 000	*7 030	5 490			*6 260	4 520	6.7
	4.5 m	kg			*12 670	*12 670	*9 030	8 220	*7 360	5 330			*6 130	3 750	7.5
	3.0 m	kg					*10 470	7 600	*7 930	5 070	6 110	3 650	5 660	3 380	7.9
	1.5 m	kg					*11 410	7 080	8 320	4 820	5 990	3 540	5 470	3 250	8.0
	0 m	kg					*11 250	6 840	8 130	4 660	5 910	3 470	5 620	3 310	7.8
	-1.5 m	kg			*11 440	*11 440	*10 090	6 810	*7 610	4 610			*5 710	3 620	7.3
	-3.0 m	kg					*7 860	6 940	*5 700	4 710			*5 030	4 400	6.4
Boom : 5.57 m 2-pieces Arm : 2.9 m HD Shoe : 500 mm CWT : 5 400 kg	9.0 m	kg											*6 190	*6 190	4.0
	7.5 m	kg					*7 070	*7 070	*5 120	*5 120			*4 990	*4 990	6.0
	6.0 m	kg					*7 130	*7 130	*6 690	5 590			*4 610	4 110	7.2
	4.5 m	kg			*9 100	*9 100	*8 560	8 400	*7 080	5 420	*6 230	3 800	*4 520	3 480	7.9
	3.0 m	kg					*10 060	7 760	*7 710	5 140	6 160	3 690	*4 620	3 160	8.3
	1.5 m	kg					*11 220	7 170	*8 250	4 860	6 010	3 560	*4 900	3 040	8.4
	0 m	kg			*5 940	*5 940	*11 370	6 850	8 150	4 670	5 910	3 460	5 230	3 090	8.2
	-1.5 m	kg			*10 830	*10 830	*10 490	6 770	*7 850	4 590	*5 790	3 440	*5 490	3 340	7.7
	-3.0 m	kg			*10 950	*10 950	*8 580	6 850	*6 380	4 640			*4 980	3 960	6.8
Boom : 5.7 m GP Arm : 2.5 m HD Shoe : 500 mm CWT : 5 400 kg	7.5 m	kg											*5 680	*5 680	5.6
	6.0 m	kg							*5 500	*5 500			*5 600	4 460	6.8
	4.5 m	kg					*6 970	*6 970	*6 010	5 360	*5 680	3 810	*5 690	3 740	7.6
	3.0 m	kg					*8 970	7 640	*6 880	5 120	*5 980	3 720	5 580	3 390	8.0
	1.5 m	kg					*10 730	7 180	*7 780	4 890	6 010	3 610	5 410	3 260	8.1
	0 m	kg					*11 530	6 970	8 160	4 740	5 930	3 540	5 540	3 320	7.9
	-1.5 m	kg			*10 800	*10 800	*11 460	6 940	8 110	4 700			6 070	3 620	7.4
	-3.0 m	kg			*14 740	13 150	*10 550	7 040	*7 780	4 770			*6 990	4 340	6.5
	-4.5 m	kg			*11 410	*11 410	*8 150	7 310					*7 140	6 380	5.0
Boom : 5.7 m GP Arm : 2.9 m GP Shoe : 500 mm CWT : 5 400 kg	7.5 m	kg							*5 210	*5 210			*4 970	*4 970	6.2
	6.0 m	kg							*5 100	*5 100			*4 630	4 100	7.3
	4.5 m	kg							*5 670	5 470	*5 360	3 890	*4 580	3 490	8.0
	3.0 m	kg					*8 430	7 820	*6 590	5 210	*5 760	3 780	*4 700	3 190	8.4
	1.5 m	kg					*10 340	7 300	*7 560	4 960	6 060	3 660	*5 020	3 080	8.5
	0 m	kg			*5 430	*5 430	*11 400	7 020	8 210	4 790	5 960	3 560	5 200	3 130	8.3
	-1.5 m	kg	*6 280	*6 280	*10 320	*10 320	*11 570	6 940	8 130	4 710	5 930	3 540	5 630	3 370	7.8
	-3.0 m	kg	*11 380	*11 380	*15 630	13 040	*10 920	7 010	*8 090	4 750			6 650	3 950	7.0
	-4.5 m	kg			*12 740	*12 740	*9 070	7 230					*6 930	5 410	5.6
Boom : 5.7 m GP Arm : 3.5 m GP Shoe : 500 mm CWT : 5 400 kg	7.5 m	kg											*4 250	*4 250	6.8
	6.0 m	kg									*4 610	3 960	*4 040	3 670	7.8
	4.5 m	kg							*5 010	*5 010	*4 820	3 890	*4 020	3 170	8.5
	3.0 m	kg			*11 270	*11 270	*7 410	*7 410	*5 980	5 240	*5 300	3 760	*4 150	2 910	8.8
	1.5 m	kg					*9 520	7 370	*7 050	4 960	*5 860	3 620	*4 450	2 800	8.9
	0 m	kg			*7 050	*7 050	*10 940	7 000	*7 910	4 740	5 900	3 500	4 740	2 830	8.7
	-1.5 m	kg	*6 210	*6 210	*10 310	*10 310	*11 470	6 840	8 040	4 620	5 830	3 430	5 070	3 010	8.3
	-3.0 m	kg	*10 120	*10 120	*15 210	12 770	*11 190	6 850	8 030	4 610	5 850	3 460	5 840	3 450	7.5
	-4.5 m	kg	*15 160	*15 160	*14 260	13 080	*9 910	7 000	*7 170	4 730			*6 700	4 480	6.3

Notes: 1. Machine in “Fine Mode-F” (Power Boost) for lifting capacities. 2. The above loads are in compliance with SAE J1097 and ISO 10567 Hydraulic Excavator Lifting Capacity Standards. 3. Rated loads do not exceed 87% of hydraulic lifting capacity or 75% of tipping load. 4. Rated loads marked with an asterisk (*) are limited by hydraulic capacity rather than tipping load.

LIFTING CAPACITY EC230F LR

Lifting capacity at the arm end without bucket.
For lifting capacity including bucket, simply subtract actual weight of the direct fit bucket or the bucket with quick coupler from the following values.

	Lifting hook related to ground level		1.5 m		3.0 m		4.5 m		6.0 m		7.5 m		9.0 m	
			Along UC	Across UC	Along UC	Across UC	Along UC	Across UC	Along UC	Across UC	Along UC	Across UC	Along UC	Across UC
Boom : 8.8 5m LR Arm : 6.25 m LR Shoe : 800 mm CWT : 5 400 kg	12.0 m	kg												
	10.5 m	kg												
	9.0 m	kg												
	7.5 m	kg												
	6.0 m	kg												
	4.5 m	kg											*2 820	*2 820
	3.0 m	kg					*6 290	*6 290	*4 580	*4 580	*3 720	*3 720	*3 200	3 140
	1.5 m	kg					*7 930	7 490	*5 570	5 140	*4 320	3 790	*3 600	2 920
	0 m	kg			*2 460	*2 460	*5 610	*5 610	*6 350	4 680	*4 850	3 500	*3 960	2 720
	-1.5 m	kg	*2 640	*2 640	*3 340	*3 340	*5 610	*5 610	*6 860	4 410	*5 240	3 280	4 220	2 570
	-3.0 m	kg	*3 560	*3 560	*4 320	*4 320	*6 300	*6 300	*7 100	4 270	5 310	3 160	4 120	2 460
	-4.5 m	kg	*4 520	*4 520	*5 390	*5 390	*7 350	6 450	*7 120	4 230	5 250	3 100	4 060	2 420
	-6.0 m	kg	*5 540	*5 540	*6 580	*6 580	*8 720	6 560	*6 920	4 270	5 260	3 110	4 060	2 420
	-7.5 m	kg	*6 650	*6 650	*7 940	*7 940	*8 470	6 750	*6 480	4 380	*5 170	3 180	4 120	2 470
	-9.0 m	kg			*9 540	*9 540	*7 360	7 030	*5 720	4 560	*4 560	3 320	*3 640	2 600
	-10.5 m	kg					*5 640	*5 640	*4 400	*4 400	*3 360	*3 360		

	Lifting hook related to ground level		10.5 m		12.0 m		13.5 m		Max. reach		Max.
			Along UC	Across UC	Along UC	Across UC	Along UC	Across UC	Along UC	Across UC	m
Boom : 8.8 5m LR Arm : 6.25 m LR Shoe : 800 mm CWT : 5 400 kg	12.0 m	kg							*870	*870	10.3
	10.5 m	kg							*790	*790	11.6
	9.0 m	kg			*1 440	*1 440			*750	*750	12.6
	7.5 m	kg	*2 230	*2 230	*2 050	*2 050			*730	*730	13.4
	6.0 m	kg	*2 390	*2 390	*2 330	2 110	*1 320	*1 320	*730	*730	13.9
	4.5 m	kg	*2 610	2 590	*2 470	2 030	*1 810	1 600	*740	*740	14.3
	3.0 m	kg	*2 870	2 450	*2 640	1 940	*2 160	1 550	*770	*770	14.5
	1.5 m	kg	*3 140	2 300	*2 820	1 840	*2 410	1 490	*820	*820	14.6
	0 m	kg	*3 390	2 170	2 880	1 750	2 400	1 430	*880	*880	14.4
	-1.5 m	kg	3 400	2 060	2 800	1 680	*2 340	1 390	*970	*970	14.2
	-3.0 m	kg	3 320	1 980	2 750	1 630	*1 680	1 360	*1 090	*1 090	13.7
	-4.5 m	kg	3 280	1 950	2 730	1 610			*1 270	*1 270	13.1
	-6.0 m	kg	3 290	1 960	*2 440	1 640			*1 550	*1 550	12.3
	-7.5 m	kg	3 360	2 020					*2 020	1 870	11.2
	-9.0 m	kg							*3 000	2 380	9.7
	-10.5 m	kg							*3 240	*3 240	7.7

Notes: 1. Machine in “Fine Mode-F” (Power Boost) for lifting capacities. 2. The above loads are in compliance with SAE J1097 and ISO 10567 Hydraulic Excavator Lifting Capacity Standards. 3. Rated loads do not exceed 87% of hydraulic lifting capacity or 75% of tipping load. 4. Rated loads marked with an asterisk (*) are limited by hydraulic capacity rather than tipping load.

Equipment

STANDARD AND OPTIONAL EQUIPMENT	
• = Standard / o = Optional	
Engine	
Turbocharged, 4 stroke diesel engine with water cooling, direct injection and charged air cooler that meets Stage V requirements	•
Electric cooling fan system	•
New work mode with 10 steps	•
Cyclone pre-cleaner	•
Fuel shut off valve	•
Engine block heater	o
Coolant heater by diesel	o
Reversible fan drive	o
Precleaner, oil bath	o
Air filter, High efficiency	o
Delayed engine shutdown	o
Automatic engine shutdown	o
Water separator with heater	o
Arctic regeneration	o
Regeneration control	o
Oil sampling port for engine oil	o
Electric / Electronic control system	
Anti-theft with code lock system	•
Alternator, 180 A	•
Automatic idling system	•
Lock Out / Tag Out function on battery main switch	•
Standard light	•
Basic light package	o
Advanced light package	o
Deluxe light package	o
Arm light	o
LH light	o
Undercarriage and structures	
3-point side access	•
Direct filling DEF (AdBlue) / Sight gauge and splash guard	•
Openable 1 piece hood	•
Platform handrail fixed & Guardrail, foldable	o
Inner rail	o
SIPS (Side Impact Protection Steel)	o
HD Side door & hood with screen	o
Without lower structure	o
Lower frame NL,N,NH,High walker	o
Link 500/600/700/800/900 mm triple grouser shoe	o
Link 600 mm triple grouser shoe, HD	o
Link 600 mm single grouser shoe	o
Link 600 mm add rubber pad shoe	o
Link 700 mm double grouser shoe	o
Full track guard	o
Counterweight 5 400 kg	o

STANDARD AND OPTIONAL EQUIPMENT	
• = Standard / o = Optional	
Hydraulic system	
EH-positive (Electro-Hydraulic) control system	•
Boom up & swing priority	•
Auto warm up	•
Auto power boost	•
One touch power boost	•
Priority Adjustment	•
Boom down speed control	•
Shock reduction function	•
Joystick, Semi-long / 4 switch / 4 switch & 1 proportional / Simple L8 / L8	o
Hydraulic oil mineral, 32 / 46 / 68	o
Longlife hyd oil mineral, 32 / 46 / 68	o
Hydraulic oil bio 46	o
Pattern change	o
Boom float function	o
Straight travel pedal	o
Comfort driving control	o
Creep mode	o
Dedicated drain line	o
Variable X3 P-Q control	o
Hose rupture valve for boom	•
Hose rupture valve for arm	•
X1/X3/QF Piping on Long Reach Boom & Arm	o
Cab and interior	
Keyless engine start and stop	•
8” HD display	•
ROPS certified cab	•
Tiltable left console	•
Digital hour meter	•
Wireless mobile charger with Kinematic sensor package option	•
Various storage space with cool/heated	•
Cleaning air gun	o
1 piece wind shield cab	o
High visibility cab	o
Cabin large mirror	o
Cabin large mirror, Heated	o
Basic / Premium / Deluxe seat	o
Seat belt, 2 inch 2 point /3 inch 2 point /3 inch 3 point	o
Climate control-HEPA filter	o
Radio with MP3/USB/Bluetooth	o
Front rain shield	o
Sun screen	o
Lower wiper	o
Sun shield, roof hatch	o
Foot rest, High mount	o
FOG (Falling Object Guard)	o
FOPS (Falling Object Protection Structure)	o
Safety net	o

STANDARD AND OPTIONAL EQUIPMENT	
• = Standard / o = Optional	
Digging equipment	
GP 5.7 m boom	•
HD 5.7 m boom / VA 5.57 m boom / LR 8.85 m boom	o
GP 2.9 m arm	•
HD 2.9 m arm / ME 2.0 m arm / HD 2.5 m arm / GP 3.5 m arm	o
Machine controls	
Kinematic sensor package	•
Volvo Co-Pilot 2nd display, 12.8” touchable Full HD	•
Dig Assist, Start	o
Dig Assist, 2D	o
Dig Assist, In-Field Design	o
Dig Assist, Topcon 3D-MC	o
Dig Assist, Trimble Earthworks	o
Dig Assist, Infield-Design Advanced	o
Dig Assist, On-Board Weighing	o
Dig Assist, Laser Receiver	o
Volvo Active Control	o
Dig Assist, Boundary Limit	o
Service and maintenace	
Fuel level gauge	•
Swing out A/C condenser	•
Fuel filler pump	o
Quick Hydraulic Oil Fill connection	o
Jump start connector	o
Auto lubrication system	o
Tool kit	o
Safety and security	
Travel alarm, beep / white noise	o
Flashing beacon, LED	o
Green light beacon	o
Rear view camera	•
Side view camera	o
HD VSV(Volvo Smart View)	o
HD VSV with obstacle detection	o
Provision, HD VSV with obstacle detection	o

Not all products are available in all markets. Under our policy of continuous improvement, we reserve the right to change specifications and design without prior notice. The illustrations do not necessarily show the standard version of the machine.