VOLVO

Volvo Excavators 12.9-15.9 t 105 hp

EC140D

Volvo Construction Equipment

Do more and increase profit

Make more profit with the EC140D. This machine's reliability and durability increases your uptime allowing you to keep working and earning. With outstanding fuel efficiency and power for excellent productivity, it allows you to work faster and get more done.

ECO mode

Work efficiently and profitably with Volvo's intelligent ECO mode. This feature contributes to the machine's total improved fuel efficiency –without any loss of performance.
The design optimizes flow and pressure while maintaining digging power and swing torque. Choose the right work setting for the job at hand.

Durability

Deliver a strong performance shift after shift, day after day. Built with durable components, the robust superstructure, undercarriage and boom and arm, will help you to achieve the best results in all applications.

Reliability

Quality, long lasting components and the machine's design increases uptime as well as profits. The EC140D has a robust structure and parts ensure it's reliable on your job site so you can depend on your machine to perform and work hard.

Serviceability

The EC140D is built to ensure servicing is safe, quick and easy, featuring anti-slip plates, ground-level service access and centralized filters and greasing points. Long service intervals enhance machine availability and increase uptime for maximum productivity.

OUTSTANDING FUEL EFFICIENCY

Reduce fuel consumption, increase profitability and deliver higher productivity with the EC140D, featuring best-in-class fuel efficiency. The powerful engine works in harmony with the optimized hydraulics and machine auto-idle function for lower fuel consumption.

Outperform your competition

The EC140D has outstanding power and controllability for a star performance. Superior digging power and machine stability results in faster cycle times and increased productivity.

Efficient new work mode

For fast cycle times and optimum fuel consumption, the EC140D is equipped with intelligent work modes, including the new G4 work mode. Operators can choose the best mode to suit the task at hand, selecting from I (Idle), F (Fine), G (General), H (Heavy) and P (Power max) mode.
Choose the correct mode according to your working conditions for added versatility and increased performance.

Operator performance

Operate in a comfortable cab for a more productive working day. The EC140D has a premium cab equipped with an easy-to-view monitor, spacious and safe operator environment, offering enhanced all-around visibility, an adjustable seat and ergonomic controls.

Powerful Volvo engine

The engine boasts the best power and performance in its class, and its effective cooling capacity increases its longevity and performance.

Machine stability

Improve your stability and work in more challenging environments with the machine's long, wide undercarriage and heavy counterweight for a well-balanced and solid machine when operating in all terrains.

SUPERIOR MACHINE PERFORMANCE

The EC140D is designed to help you do more. This excavator delivers a strong, versatile performance in a wide range of applications. A robust frame combines with excellent engine power and hydraulic system to provide superior digging forces and fast cycle times for first-rate productivity in all operations.

One machine for many jobs

Volvo offers a wide range of attachment combinations that are suitable for any job site. Volvo attachments are an integrated part of the excavator for which they are intended – delivering maximum productivity and versatility.

Quality Volvo buckets

Volvo's General Purpose bucket is ideal for digging in low impact materials such as soft ground and comes with a standard GP tooth and lifting hook. The Volvo Heavy-Duty bucket is heavier and more robust with a rigid top structure and double wear shrouds on each side of the bucket. It is thicker for aggressive digging and bucket loading, and the RC tooth comes as standard.

Breakers

Volvo's durable hydraulic breaker has been designed for ultimate compatibility with Volvo excavators and is built to break even the most demanding materials. With consistent power and high breaking force you'll benefit from maximum impact and durability. Set your Volvo breaker at the right frequency to suit your application needs.

Attachment Management System

The password protected attachment management system allows storage for up to 20 different attachments.
The system allows the operator to pre-set hydraulic flow inside the cab through the monitor, which ensures the use of various attachments for increased versatility.

Quick Couplers

Volvo offers a full range of quick couplers, from its dedicated Volvo S-type coupler to the Universal type, with front pin lock technology. These innovative couplers are not only designed to fit perfectly with Volvo excavators but they also comply with the latest safety regulations.

A VERSATILE MACHINE

Access more applications and efficiently perform a variety of tasks with Volvo's extensive attachment range.
The EC140D is compatible with a selection of robust buckets, breakers and piping options that allow you to adapt to any job with ease.

A valued performance

A versatile machine

Access more applications and efficiently perform a variety of tasks with Volvo's extensive attachment range.

Operator performance

The EC140D's premium cab is equipped with an easy-to-view monitor and features a spacious and safe operator environment.

Durability

Robust superstructure, undercarriage and boom and arm, helps to achieve the best results.

Reliability

The machine's durable components and parts ensure it's reliable on your job site.

Superior machine performance

This excavator delivers a strong, versatile performance in a wide range of applications.

Serviceability

Built to ensure servicing is safe, quick and easy, featuring anti-slip plates, ground-level service access, centralized filters and greasing points.

ECO mode

This feature contributes to the machine's total improved fuel efficiency – without any loss of performance.

Outstanding fuel efficiency

Reduce fuel consumption, increase profitability and deliver higher productivity.

Efficient new work mode

For fast cycle times and optimum fuel consumption, the EC140D is equipped with intelligent work modes.

Powerful Volvo engine

The engine boasts the best power and performance in its class.

Machine stability

A well-balanced and solid machine when operating in all terrains with the machine's long, wide undercarriage and heavy counterweight.

Customer Support Agreements

Customer Support Agreements offer preventive maintenance, total repairs and a number of uptime services.

Adding value to your business

Being a Volvo customer means having a complete set of services at your fingertips. Volvo can offer you a long-term partnership, protect your revenue and provide a full range of customer solutions using high quality parts, delivered by passionate people. Volvo is committed to a positive return on your investment.

Complete Solutions

Volvo has the right solution for you. So why not let us provide all your needs throughout the whole life cycle of your machine? By listening to your requirements, we can reduce your total cost of ownership and increase your revenue.

Genuine Volvo Parts

Our attention to detail is what makes us stand out. This proven concept acts as a solid investment in your machine's future. Parts are extensively tested and approved because every part is vital for uptime and performance. Only by using Genuine Volvo Parts, can you be sure that your machine retains the renowned Volvo quality.

Service Network

In order to respond to your needs faster, a Volvo expert is on the way to your job site from one of our Volvo facilities. With our extensive infrastructure of technicians, workshops and dealers, Volvo has a comprehensive network to fully support you using local knowledge and global experience.

CareTrack

CareTrack is the state-of-the-art Volvo telematics system that provides access to a wide range of machine monitoring information designed to save time and money. Proactively manage service and maintenance schedules, optimize machine and operator performance and reduce fuel costs with CareTrack.

CUSTOMER SUPPORT AGREEMENTS

The range of Customer Support Agreements offer preventive maintenance, total repairs and a number of uptime services. Volvo uses the latest technology to monitor machine operation and status, giving you advice to increase your profitability. By having a Customer Support Agreement you are in control of your service costs.

Volvo EC140D in detail

Engine

The engine, which provide excellent performance, is equipped with four cylinder, vertical, electronic-controlled high pressure fuel injectors, cooled EGR, 3.8 liter in-line waste gate turbo charger, air-to-air intercooler and water cooled diesel engine type.

Engine	Volvo	D3.8E
Max power at	r/min	2 200
Net, ISO 9249/SAE J1349	kW	73.3
	hp	100
Gross, ISO 14396/SAE J1995	kW	77.4
	hp	105
Max torque	Nm	369.5
at engine speed	r/min	1 500
No. of cylinders		4
Displacement	l	3.77
Bore	mm	100
Stroke	mm	120

Electrical System

Well protected high-capacity electrical system. Waterproof double-lock connectors are used to ensure corrosion-free connection. Main relays and fuses are located in a shielded electrical distribution box. The master switch is standard. Advanced monitoring of machine functions and important diagnostic information is displayed on the I-ECU.

Voltage	V	24
Batteries	V	2 x 12
Battery capacity	Ah	100
Alternator	V/Ah	28/80
Start motor	V - kW	24 - 3.2

Swing System

The swing system uses an axial piston motors, driving a planetary gearbox for maximum torque. An automatic holding brake and anti-rebound valve are standard

Max. slew speed	r/min	11.2
Max. slew torque	kNm	30.2

Travel system

Each track is powered by an automatic two-speed shift travel motor. The track brakes are multi-disc, spring-applied and hydraulic released. The travel motor, brake and planetary gears are well protected within the track frame.

		EC140DL
Max. drawbar pull	kN	119
Max. travel speed (low)	km/h	2.9
Max. travel speed (high)	km/h	5.2
Gradeability	°	35
		EC140DLM
Max. drawbar pull	kN	137
Max. travel speed (low)	km/h	2.5
Max. travel speed (high)	km/h	4.4
Gradeability	°	35

Undercarriage

Robust X-shaped frame with greased and sealed track chains as standard.

		EC140DL
Track shoe		2 x 46
Link pitch	mm	171.5
Shoe width, triple grouser	mm	500 / 600 / 750
Shoe width, triple grouser (HD)	mm	600 / 700
Bottom rollers		2 x 7
Top rollers		2 x 1
		EC140DLM
Track shoe		2 x 42
Link pitch	mm	190
Shoe width, triple grouser	mm	600 / 700 / 800 / 900
Shoe width, single grouser	mm	900
Bottom rollers		2 x 6
Top rollers		2 x 2

Hydraulic System

The electro-hydraulic system and MCV (main control valve) use intelligent technology to control on-demand flow for high productivity, high-digging capacity and excellent fuel economy. The summation system, boom, arm and swing priority along with boom and arm regeneration provides optimum performance.
The following important functions are included in the system:
Summation system: Combines the flow of both hydraulic pumps to ensure quick cycle times and high productivity.
Boom priority: Gives priority to the boom operation for faster raising when loading or performing deep excavations.
Arm priority: Gives priority to the arm operation for faster cycle times in leveling and for increased bucket filling when digging.
Swing priority: Gives priority to swing functions for faster simultaneous operations.
Regeneration system: Prevents cavitation and provides flow to other movements during simultaneous operations for maximum productivity.
Power boost: All digging and lifting forces are increased.
Holding valves: Boom and arm holding valves prevent the digging equipment from creeping.

Main pump, 2 x variable displacement axial piston pumps		
Maximum flow	l/min	2 x 118
Pilot pump, Gear pump		
Maximum flow	l/min	1 x 22
Relief value setting pressure		
Implement	MPa	32.4 / 34.3
Travel circuit	MPa	34.3
Slew circuit	MPa	24.5
Pilot circuit	MPa	3.9

Hydraulic Cylinders

Mono boom		2
Bore x Stroke	ø x mm	105 x 980
Arm		1
Bore x Stroke	ø x mm	120 x 1 045
Bucket		1
Bore x Stroke	ø x mm	100 x 865
Dozer blade		1
Bore x Stroke	ø x mm	130 x 270

Service Refill

Fuel tank	l	250
Hydraulic system, total	l	230
Hydraulic tank	l	85
Engine oil	l	13.2
Engine coolant	l	22.3
Slew reduction unit	l	3.9
Travel reduction unit (LC)	l	2 x 2.2
Travel reduction unit (LM)	l	2 x 5.8

Cab

The Volvo cab features a brand new Volvo styling including a strong cab structure, slim pillars and a large glass area for good visibility, a spacious cab, an ergonomic switch layout, efficient air ventilation and a pressurized cab.

Sound Level

Sound level in cab according to ISO 6396		
LpA	dB(A)	70
External sound level according to ISO 6395 and EU Noise Directive (2000/14/EC)		
LwA	dB(A)	101

Specifications

MACHINE WEIGHTS AND GROUND PRESSURE

Description	Shoe width	Operating weight		Ground pressure		Overall width	
Units	mm	kg		kPa		mm	
		EC140DL, 4.6m boom, 2.5m arm, 0.54m³ / 436kg bucket, 2 100kg counterweight			EC140DL, 4.6m boom, 2.5m arm, 0.54m³ / 436kg bucket, 2 450kg counterweight		
Triple grouser	500	13 500	40.2	2 490	13 850	41.2	2 490
	600	13 700	34.3	2 590	14 050	35.3	2 590
	750	14 080	27.5	2 740	14 430	28.4	2 740
Triple grouser, HD	600	13 770	34.3	2 590	14 120	35.3	2 590
	700	13 980	29.4	2 690	14 330	30.4	2 690
		EC140DL with dozer blade, 4.6m boom, 2.5m arm, 0.54m³ / 436kg bucket, 2100kg counterweight			EC140DL with dozer blade, 4.6m boom, 2.5m arm, 0.54m³ / 436kg bucket, 2450kg counterweight		
Triple grouser	500	14 460	43.1	2 490	14 810	44.1	2 490
	600	14 660	36.3	2 590	15 010	37.3	2 590
	750	15 040	29.4	2 740	15 390	30.4	2 740
Triple grouser, HD	600	14 730	36.3	2 590	15 080	37.3	2 590
	700	14 940	31.4	2 690	15 290	32.4	2 690
		EC140DLM, 4.6m boom, 2.5m arm, 0.52m³ / 460kg bucket, 2 100kg counterweight			EC140DLM, 4.6m boom, 2.5m arm, 0.52m³ / 460kg bucket, 2 450kg counterweight		
Triple grouser	600	14 770	36.3	2 590	15 120	37.3	2 590
	700	14 980	31.4	2 690	15 330	32.4	2 690
	800	15 400	28.4	2 790	15 750	29.4	2 790
	900	15 650	25.5	2 890	16 000	26.5	2 890
Triple grouser, HD	900	15 720	26.5	2 890	16 070	26.5	2 890

BUCKET SELECTION GUIDE

Bucket type		Capacity	Cutting width	Weight	Teeth	EC140DL 4.6m boom 500mm shoe, 2 100kg counterweight			EC140DL 4.6m boom 500mm shoe, 2 450kg counterweight		
		m³	mm	kg	EA	2.1m	2.5m	3.0m	2.1m	2.5m	3.0m
Direct fit buckets	General purpose	0.25	450	326	3	C	C	C	C	C	C
		0.33	600	357	3	C	C	C	C	C	C
		0.54	900	436	4	C	C	B	C	C	C
		0.66	1 050	476	4	C	B	A	C	C	B
		0.73	1 150	486	5	B	A	X	C	B	A

Please consult with your Volvo dealer for the proper match of buckets and attachments to suit the application.
The recommendations are given as a guide only, based on typical operation conditions.
Bucket capacity based on ISO 7451, heaped material with a 1:1 angle of repose.

Maximum materal density

A	1 200~1 300 kg/m³	Coal, Caliche, Shale
B	1 400~1 600 kg/m³	Wet earth and clay, Limestone, Sandstone
C	1 700~1 800 kg/m³	Granite, Wet sand, Well blasted rock
D	1 900 kg/m³ ~	Wet mud, Iron ore

X : Not recommended

Specifications

DIMENSIONS

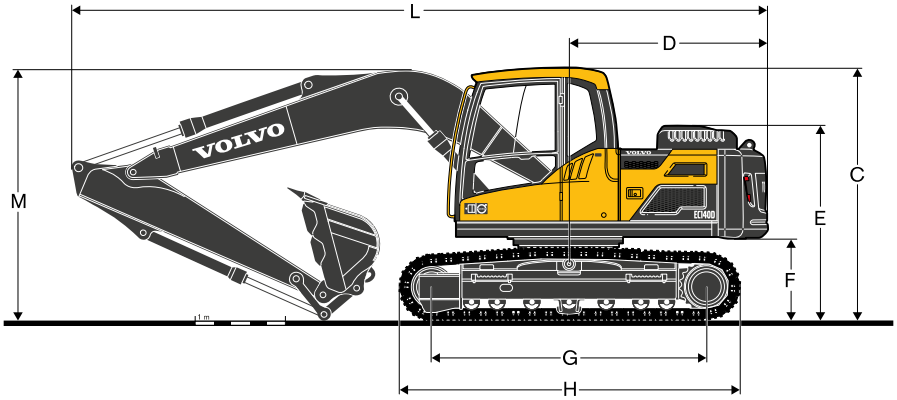

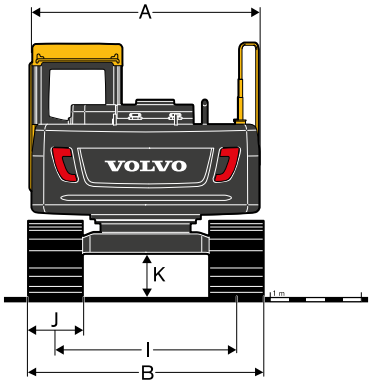

Description		Unit	EC140DL			EC140DLM		
Boom		**m**	**4.6**	**4.6**	**4.6**	**4.6**	**4.6**	**4.6**
Arm		**m**	**2.1**	**2.5**	**3.0**	**2.1**	**2.5**	**3.0**
A	Overall width of upper structure	mm	2 490	2 490	2 490	2 490	2 490	2 490
B	Overall width	mm	2 590	2 590	2 590	2 690	2 690	2 690
C	Overall height of cab	mm	2 800	2 800	2 800	2 980	2 980	2 980
D	Tail swing radius	mm	2 200	2 200	2 200	2 200	2 200	2 200
E	Overall height of engine hood	mm	2 170	2 170	2 170	2 350	2 350	2 350
F	Counterweight clearance *	mm	920	920	920	1 113	1 113	1 113
G	Tumbler length	mm	3 040	3 040	3 040	3 000	3 000	3 000
H	Track length	mm	3 760	3 760	3 760	3 790	3 790	3 790
I	Track gauge	mm	1 990	1 990	1 990	1 990	1 990	1 990
J	Shoe width	mm	600	600	600	700	700	700
K	Min. ground clearance *	mm	436	436	436	580	580	580
L	Overall length	mm	7 720	7 720	7 650	7 690	7 720	7 690
M	Overall height of boom	mm	2 670	2 800	3 180	2 730	2 850	3 160

* Without shoe grouser

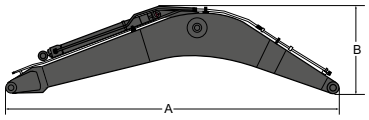

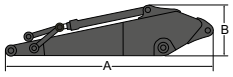

Description		Unit		Description		Unit			
Boom		**m**	**4.6**	**Arm**		**m**	**2.1**	**2.5**	**3.0**
A	Length	mm	4 770	A	Length	mm	2 800	3 200	3 700
B	Height	mm	1 370	B	Height	mm	710	710	780
	Width	mm	545		Width	mm	300	300	300
	Weight	kg	1 060		Weight	kg	585	625	695

Includes cylinder, piping and pin, excludes boom cylinder pin

* Includes bucket cylinder, linkage and pin

Description		Unit	
Front dozer blade			
A	Height	mm	580
	Width	mm	2 590
	Weight	kg	458
B	Lift height	mm	480
C	Digging depth	mm	600

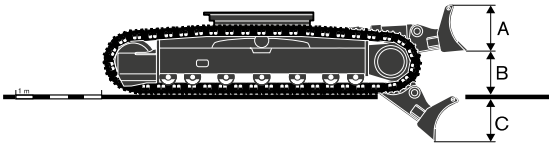

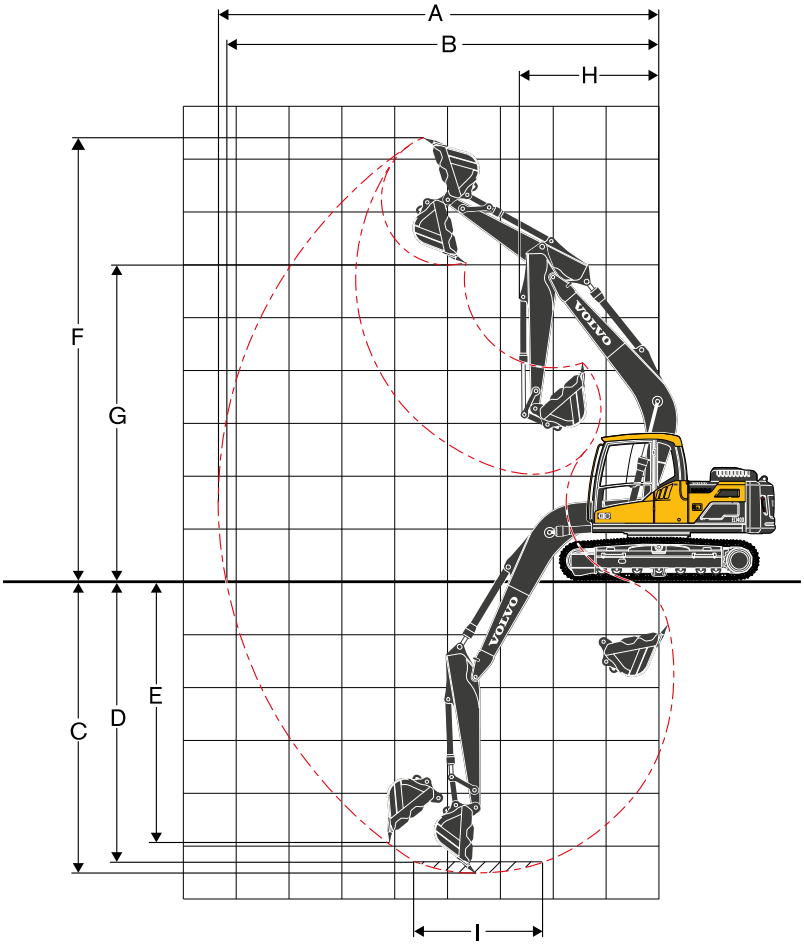

WORKING RANGES								
Description		**Unit**	**EC140DL**			**EC140DLM**		
Boom		**m**	**4.6**	**4.6**	**4.6**	**4.6**	**4.6**	**4.6**
Arm		**m**	**2.1**	**2.5**	**3.0**	**2.1**	**2.5**	**3.0**
A Max. digging reach		mm	7 960	8 330	8 820	7 960	8 330	8 820
B Max. digging reach on ground		mm	7 820	8 190	8 680	7 780	8 160	8 660
C Max. digging depth		mm	5 130	5 530	6 030	4 960	5 360	5 860
D Max.digging depth (2.44 m level)		mm	4 870	5 310	5 850	4 710	5 140	5 680
E Max. vertical wall digging depth		mm	4 580	4 960	5 460	4 400	4 780	5 320
F Max. cutting height		mm	8 160	8 390	8 720	8 330	8 560	8 900
G Max. dumping height		mm	5 790	6 020	6 300	5 910	6 150	6 490
H Min. front swing radius		mm	2 570	2 630	2 740	2 570	2 630	2 740
DIGGING FORCES WITH DIRECT FIT BUCKET								
Bucket radius		mm	1 247.5	1 247.5	1 247.5	1 247.5	1 247.5	1 247.5
Breakout force - bucket	Normal SAE J1179	kN	82.2	82.2	82.2	82.2	82.2	82.2
	Power boost SAE J1179	kN	87.2	87.2	87.2	87.2	87.2	87.2
	Normal ISO 6015	kN	92.9	92.9	92.9	92.9	92.9	92.9
	Power boost ISO 6015	kN	98.5	98.5	98.5	98.5	98.5	98.5
Tearout force - dipper arm	Normal SAE J1179	kN	69.2	61.8	55.0	69.2	61.8	55.0
	Power boost SAE J1179	kN	73.4	65.5	58.3	73.4	65.5	58.3
	Normal ISO 6015	kN	71.4	63.4	56.2	71.4	63.4	56.2
	Power boost ISO 6015	kN	75.7	67.3	59.6	75.7	67.3	59.6
Rotation angle, bucket		°	175	175	175	175	175	175

Specifications

LIFTING CAPACITY EC140DL

Lifting capacity at the arm end without bucket.
For lifting capacity including bucket, simply subtract actual weight of the direct fit bucket or the bucket with quick coupler from the following values.

	Lifting hook related to ground level		1.5 m		3.0 m		4.5 m		6.0 m		7.5 m		Max. reach		
			Along UC	Across UC	Along UC	Across UC	Along UC	Across UC	Along UC	Across UC	Along UC	Across UC	Along UC	Across UC	m
Boom : 4.6m	6.0 m	kg					*3 330	*3 330					*3 510	3 080	4.9
Arm : 2.1m	4.5 m	kg					*3 480	*3 480					3 450	2 210	6.0
Shoe : 600mm	3.0 m	kg			*6 240	6 190	*4 340	3 330	3 390	2 150			2 950	1 870	6.5
CWT : 2 100kg	1.5 m	kg					5 130	3 120	3 300	2 070			2 780	1 750	6.7
	0 m	kg			*5 400	*5 400	4 970	2 990	3 230	2 010			2 850	1 780	6.5
	-1.5 m	kg	*5 010	*5 010	*9 460	5 430	4 930	2 950					3 230	2 010	6.0
	-3.0 m	kg			*8 230	5 540	5 000	3 010					4 390	2 690	4.9
Boom : 4.6m	6.0 m	kg					*2 840	*2 840					*3 220	2 640	5.4
Arm : 2.5m	4.5 m	kg					*3 080	*3 080	*3 200	2 230			3 100	1 990	6.4
Shoe : 600mm	3.0 m	kg			*5 340	*5 340	*3 960	3 370	3 400	2 160			2 700	1 710	6.9
CWT : 2 100kg	1.5 m	kg					*5 090	3 140	3 300	2 070			2 550	1 600	7.1
	0 m	kg			*5 960	5 390	4 970	2 980	3 210	1 990			2 600	1 620	6.9
	-1.5 m	kg	*4 550	*4 550	*9 620	5 360	4 890	2 920	3 180	1 960			2 900	1 800	6.4
	-3.0 m	kg	*8 930	*8 930	*8 700	5 450	4 930	2 950					3 730	2 300	5.4
Boom : 4.6m	7.5 m	kg											*2 880	*2 880	4.5
Arm : 3.0m	6.0 m	kg							*2 880	2 250			*2 820	2 220	6.0
Shoe : 600mm	4.5 m	kg							*2 790	2 250			*2 650	1 740	6.9
CWT : 2 100kg	3.0 m	kg					*3 450	3 420	*3 150	2 170			2 410	1 520	7.4
	1.5 m	kg			*7 350	5 800	*4 640	3 160	3 300	2 060	2 330	1 450	2 290	1 430	7.6
	0 m	kg			*6 510	5 380	4 960	2 960	3 190	1 970			2 330	1 440	7.4
	-1.5 m	kg	*3 990	*3 990	*8 760	5 280	4 850	2 870	3 130	1 920			2 550	1 570	6.9
	-3.0 m	kg	*7 370	*7 370	*9 110	5 320	4 850	2 870	3 160	1 940			3 130	1 920	6.0
	-4.5 m	kg			*7 230	5 520							*4 500	3 020	4.5
Boom : 4.6m	6.0 m	kg					*3 330	*3 330					*3 510	3 280	4.9
Arm : 2.1m	4.5 m	kg					*3 480	*3 480					*3 570	2 370	6.0
Shoe : 600mm	3.0 m	kg			*6 240	*6 240	*4 340	3 560	3 590	2 310			3 130	2 020	6.5
CWT : 2 450kg	1.5 m	kg					*5 400	3 350	3 500	2 230			2 950	1 890	6.7
	0 m	kg			*5 400	*5 400	5 280	3 220	3 430	2 170			3 030	1 930	6.5
	-1.5 m	kg	*5 010	*5 010	*9 460	5 840	5 230	3 180					3 440	2 170	6.0
	-3.0 m	kg			*8 230	5 950	5 310	3 240					4 660	2 890	4.9
Boom : 4.6m	6.0 m	kg					*2 840	*2 840					*3 220	2 820	5.4
Arm : 2.5m	4.5 m	kg					*3 080	*3 080	*3 200	2 390			*3 160	2 130	6.4
Shoe : 600mm	3.0 m	kg			*5 340	*5 340	*3 960	3 600	*3 500	2 330			2 860	1 840	6.9
CWT : 2 450kg	1.5 m	kg					*5 090	3 370	3 500	2 230			2 710	1 730	7.1
	0 m	kg			*5 960	5 800	5 270	3 210	3 420	2 150			2 770	1 760	6.9
	-1.5 m	kg	*4 550	*4 550	*9 620	5 770	5 200	3 150	3 380	2 120			3 090	1 950	6.4
	-3.0 m	kg	*8 930	*8 930	*8 700	5 860	5 240	3 180					3 970	2 480	5.4
Boom : 4.6m	7.5 m	kg											*2 880	*2 880	4.5
Arm : 3.0m	6.0 m	kg							*2 880	2 410			*2 820	2 380	6.0
Shoe : 600mm	4.5 m	kg							*2 790	2 420			*2 650	1 870	6.9
CWT : 2 450kg	3.0 m	kg					*3 450	*3 450	*3 150	2 330			2 570	1 640	7.4
	1.5 m	kg			*7 350	6 210	*4 640	3 390	3 500	2 230	2 480	1 580	2 440	1 550	7.6
	0 m	kg			*6 510	5 790	5 260	3 190	3 400	2 130			2 480	1 560	7.4
	-1.5 m	kg	*3 990	*3 990	*8 760	5 680	5 150	3 100	3 340	2 080			2 720	1 700	6.9
	-3.0 m	kg	*7 370	*7 370	*9 110	5 730	5 160	3 100	3 360	2 100			3 330	2 080	6.0
	-4.5 m	kg			*7 230	5 930							*4 500	3 250	4.5

Notes: 1. Machine in "Fine Mode-F" (Power Boost) for lifting capacities. 2. The above loads are in compliance with SAE J1097 and ISO 10567 Hydraulic Excavator Lifting Capacity Standards. 3. Rated loads do not exceed 87% of hydraulic lifting capacity or 75% of tipping load. 4. Rated loads marked with an asterisk (*) are limited by hydraulic capacity rather than tipping load.

LIFTING CAPACITY EC140DLM

Lifting capacity at the arm end without bucket.
For lifting capacity including bucket, simply subtract actual weight of the direct fit bucket or the bucket with quick coupler from the following values.

	Lifting hook related to ground level		1.5 m		3.0 m		4.5 m		6.0 m		7.5 m		Max. reach		
			Along UC	Across UC	Along UC	Across UC	Along UC	Across UC	Along UC	Across UC	Along UC	Across UC	Along UC	Across UC	m
Boom : 4.6m	6.0 m	kg					*3 330	*3 330					*3 510	3 400	4.9
Arm : 2.1m	4.5 m	kg					*3 480	*3 480					*3 570	2 460	6.0
Shoe : 700mm	3.0 m	kg			*6 240	*6 240	*4 340	3 690	3 750	2 410			3 270	2 100	6.5
CWT : 2 100kg	1.5 m	kg					*5 400	3 480	3 660	2 320			3 090	1 970	6.7
	0 m	kg			*5 400	*5 400	5 500	3 350	3 590	2 260			3 170	2 010	6.5
	-1.5 m	kg	*5 010	*5 010	*9 460	6 070	5 460	3 310					3 590	2 260	6.0
	-3.0 m	kg			*8 230	6 190	*5 480	3 380					*4 830	3 010	4.9
Boom : 4.6m	6.0 m	kg					*2 840	*2 840					*3 220	2 930	5.4
Arm : 2.5m	4.5 m	kg					*3 080	*3 080	*3 200	2 480			*3 160	2 220	6.4
Shoe : 700mm	3.0 m	kg			*5 340	*5 340	*3 960	3 730	*3 500	2 420			2 990	1 920	6.9
CWT : 2 100kg	1.5 m	kg					*5 090	3 510	3 660	2 320			2 840	1 810	7.1
	0 m	kg			*5 960	*5 960	5 490	3 340	3 570	2 250			2 900	1 840	6.9
	-1.5 m	kg	*4 550	*4 550	*9 620	6 010	5 420	3 280	3 540	2 220			3 230	2 030	6.4
	-3.0 m	kg	*8 930	*8 930	*8 700	6 100	5 460	3 310					4 140	2 580	5.4
Boom : 4.6m	7.5 m	kg											*2 880	*2 880	4.5
Arm : 3.0m	6.0 m	kg							*2 880	2 510			*2 820	2 470	6.0
Shoe : 700mm	4.5 m	kg							*2 790	2 510			*2 650	1 950	6.9
CWT : 2 100kg	3.0 m	kg					*3 450	*3 450	*3 150	2 430			*2 640	1 710	7.4
	1.5 m	kg			*7 350	6 450	*4 640	3 530	3 660	2 320	2 600	1 650	2 560	1 620	7.6
	0 m	kg			*6 510	6 030	5 490	3 330	3 550	2 220			2 600	1 640	7.4
	-1.5 m	kg	*3 990	*3 990	*8 760	5 920	5 370	3 230	3 490	2 170			2 850	1 780	6.9
	-3.0 m	kg	*7 370	*7 370	*9 110	5 970	5 380	3 230	3 520	2 190			3 480	2 170	6.0
	-4.5 m	kg			*7 230	6 170							*4 500	3 390	4.5
Boom : 4.6m	6.0 m	kg					*3 330	*3 330					*3 510	*3 510	4.9
Arm : 2.1m	4.5 m	kg					*3 480	*3 480					*3 570	2 620	6.0
Shoe : 700mm	3.0 m	kg			*6 240	*6 240	*4 340	3 920	*3 750	2 570			3 450	2 240	6.5
CWT : 2 450kg	1.5 m	kg					*5 400	3 710	3 860	2 480			3 260	2 110	6.7
	0 m	kg			*5 400	*5 400	5 800	3 580	3 790	2 420			3 350	2 150	6.5
	-1.5 m	kg	*5 010	*5 010	*9 460	6 480	5 760	3 540					3 790	2 420	6.0
	-3.0 m	kg			*8 230	6 600	*5 480	3 610					*4 830	3 220	4.9
Boom : 4.6m	6.0 m	kg					*2 840	*2 840					*3 220	3 110	5.4
Arm : 2.5m	4.5 m	kg					*3 080	*3 080	*3 200	2 640			*3 160	2 370	6.4
Shoe : 700mm	3.0 m	kg			*5 340	*5 340	*3 960	*3 960	*3 500	2 580			*3 150	2 060	6.9
CWT : 2 450kg	1.5 m	kg					*5 090	3 740	3 860	2 480			3 000	1 940	7.1
	0 m	kg			*5 960	*5 960	5 800	3 570	3 780	2 410			3 070	1 970	6.9
	-1.5 m	kg	*4 550	*4 550	*9 620	6 420	5 730	3 510	3 740	2 380			3 420	2 180	6.4
	-3.0 m	kg	*8 930	*8 930	*8 700	6 510	5 760	3 540					4 370	2 770	5.4
Boom : 4.6m	7.5 m	kg											*2 880	*2 880	4.5
Arm : 3.0m	6.0 m	kg							*2 880	2 670			*2 820	2 630	6.0
Shoe : 700mm	4.5 m	kg							*2 790	2 670			*2 650	2 090	6.9
CWT : 2 450kg	3.0 m	kg					*3 450	*3 450	*3 150	2 590			*2 640	1 840	7.4
	1.5 m	kg			*7 350	6 860	*4 640	3 760	*3 700	2 480	2 750	1 770	2 710	1 740	7.6
	0 m	kg			*6 510	6 440	*5 640	3 560	3 750	2 380			2 750	1 760	7.4
	-1.5 m	kg	*3 990	*3 990	*8 760	6 330	5 680	3 460	3 700	2 330			3 010	1 920	6.9
	-3.0 m	kg	*7 370	*7 370	*9 110	6 380	5 680	3 460	3 720	2 350			3 680	2 330	6.0
	-4.5 m	kg			*7 230	6 580							*4 500	3 620	4.5

Notes: 1. Machine in "Fine Mode-F" (Power Boost) for lifting capacities. 2. The above loads are in compliance with SAE J1097 and ISO 10567 Hydraulic Excavator Lifting Capacity Standards. 3. Rated loads do not exceed 87% of hydraulic lifting capacity or 75% of tipping load. 4. Rated loads marked with an asterisk (*) are limited by hydraulic capacity rather than tipping load.

Equipment

STANDARD EQUIPMENT
Engine
Turbocharged, 4 stroke diesel engine with water cooling, direct injection and charged air cooler
Air filter with indicator
Air intake heater
Fuel filter and water separator
Extra water separator
Alternator, 80 A
Fuel filler pump: 35 l/min
Electric/Electronic control system
Contronics
Advanced mode control system
Self-diagnostic system
Machine status indication
Caretrack and subscription
Engine speed sensing power control
Automatic idling system
One-touch power boost
Power max mode (P)
Safety stop/start function
Adjustable LCD color monitor
Master electrical disconnect switch
Engine restart prevention circuit
Travel alarm
Highcapacity halogen lights:
Frame-mounted 2
Boom-mounted 1
Batteries, 2 x 12 V / 100 Ah
Start motor, 24 V / 3.2 kW
Hydraulic system
Automatic sensing hydraulic system
Summation system
Boom priority
Arm priority
Swing priority
Boom and arm regeneration valves
ECO mode fuel saving technology
Swing anti-rebound valves
Boom and arm holding valves
Multi-stage filtering system
Cylinder cushioning
Cylinder contamination seals
Automatic two-speed travel motors
Superstructure
Access way with handrail
Tool storage area
Punched metal anti-slip plates
Undercovers

STANDARD EQUIPMENT
Cab and interior
ROPS (ISO12117-2) certified cab
Control lock out lever
Travel pedals and hand levers
Adjustable operator seat and joystick control console
Control joysticks
Heater & airconditioner
Flexible antenna
Cab, all-weather sound suppressed, includes:
Cup holders
Door locks
Tinted glass
Floor mat
Horn
Large storage area
Pull-up type front window
Removable lower windshield
Seat belt
Safety glass
Windshield wiper with intermittent feature
Master key
Sun screens, front, roof, rear
Undercarriage
Undercover
Hydraulic track adjusters
Greased and sealed track link
Track guard
Digging equipment
Boom: 4.6 m mono
Arm: 2.5 m
Linkage

OPTIONAL EQUIPMENT
Engine
Cyclone pre-cleaner
Rain cap
Auto engine shutdown
Electric
Extra work lights:
Boom-mounted 1
Cab-mounted 3
Counterweight-mounted 1
Rotating warning beacon
Anti-theft with code lock system
Hydraulic system
Boom hose rupture valve (HRV) with overload warning device
Aoom hose rupture valve (HRV)
Boom float with HRV
Boom float without HRV
Hydraulic piping:
Breaker & shear, 1 or 2 pump flow
Extra piping
Rotator & slope
Quick coupler
Grapple
Oil leak (drain) line
Hydraulic oil, ISO VG 32, 46, 68
Hydraulic oil, longlife oil 32, 46, 68

OPTIONAL EQUIPMENT
Cab and interior
Electric pedal for breaker and shear
Cab-mounted falling object guard (FOG)
Cab-mounted falling object protective structure (FOPS)
Radio or Radio with MP3/AUX
Rain shield
Rear view camera
Ashtray and lighter
Safety net (lower net)
Specific key
Superstructure
Rear view mirror on counterweight
Counterweight: 2 100kg, 2 450kg
Undercarriage
500 / 600 / 700 / 750 / 800 / 900 mm with triple grousers
600 / 700 mm HD with triple grousers
900 mm with single grousers
Digging equipment
Arm: 2.1m, 3.0m
Service
Tool kit, daily maintenance
Tool kit, full scale
Spare parts kit

SELECTION OF VOLVO OPTIONAL EQUIPMENT

Auto engine shutdown

Rear view camera

Auxiliary piping

Fuel filler pump

Boom float

FOG

Not all products are available in all markets. Under our policy of continuous improvement, we reserve the right to change specifications and design without prior notice. The illustrations do not necessarily show the standard version of the machine.