VOLVO

Volvo Articulated Hauler 29.0 t 53 km/h 360 hp

A30

Volvo Construction Equipment

A30

The best articulated hauler in its class, the Volvo A30 articulated hauler is the perfect choice for general construction, heavy infrastructure and quarrying. Look no further for optimum productivity, profitability, and performance.

Intuitive in-cab interface

- All essential in-cab information conveniently displayed on just two screens
- Interactive, integrated Volvo Co-Pilot display
- Dynamic instrument cluster in-front of steering wheel

Productive performance

- Outstanding tipping stability
- Width under 3-meters (including tailgate) for easy and convenient transport

The best articulated hauler in its class

The best articulated hauler in its class, get ready to take on the most challenging projects across general construction, heavy infrastructure, quarrying and more. With key features including Volvo drivetrain with Terrain Memory, an intuitive operator interface, visibility which exceeds industry standards, superior durability and lower maintenance costs; count on the A30 Volvo Articulated Hauler to deliver exceptional off-road performance, operator comfort and maximum uptime.

Unbeatable off-road performance

- Proven Volvo drivetrain
- Automatic traction control (ATC), including Terrain Memory*
- Automatic drive combinations (including 100% differential locks)
- All-terrain bogie and hydro-mechanical steering
- Volvo Dynamic Drive

Total operator control

- Hill assist
- Cruise control
- Downhill speed control
- Load and dump brake
- Dump support system
- Dynamic Volvo Engine Brake

Enhanced visibility

- Redesigned hood and cab panels
- Wider wiper coverage
- Direct field of vision which exceeds industry standards
- Optional work lights located on the pillars
- Optional front and rear cameras; standard entrance camera
- Camera views easily managed using Volvo Co-Pilot

Designed for uptime

- 250-hour greasing intervals
- Industry leading service access
- Robust access
- Remote monitoring and service alerts
- Enhanced electrical service center
- Service contracts
- Enhanced fuel filter water separator system
- Harness anchor points

Ultimate operator experience

- Easy access/egress
- Ergonomic gear lever
- Enhanced storage options
- Easy cleaning
- Durable gas-hydraulic suspension
- Operator Training Program

Smarter Solutions

- Haul Assist with On-Board Weighing
- Connected Map and Performance Indicator
- Future proofed software architecture
- CareTrack
- My Equipment app
- Site optimization consultancy service

* In markets with CareTrack

Unbeatable off-road performance

The Volvo Articulated Hauler delivers best-in-class off-road performance with features including the proven Volvo drivetrain, automatic drive combinations (including 100% differential locks), all-terrain bogie and hydro-mechanical steering for unmatched traction, stability and precision control. With Volvo Dynamic Drive, dynamic and predictive gear selection adapts to the operating conditions at hand, for improved comfort and fuel efficiency.

Intuitive operator interface

Operators can stay in-the-know and focussed on the task at hand thanks to all essential in-cab information conveniently displayed on two screens. The interactive, integrated Volvo Co-Pilot display offers easy control over essential functions such as media, camera settings, climate control, and machine status. This is combined with the dynamic instrument cluster, positioned in front of the steering wheel, which provides essential vehicle data at a glance.

Haul Assist with On-Board Weighing

Haul Assist, powered by the integrated Volvo Co-Pilot, is a set of tools designed to help you get even more productivity and efficiency from your Volvo Articulated Hauler. A key feature of Haul Assist is On-Board Weighing, which provides real-time payload information which can help to eliminate carry-back and overloading. The result is peak productivity, reduced fuel consumption and less machine wear.

Volvo DNA throughout the powertrain

Experience superb fuel efficiency without compromising on power and performance thanks to the world-renowned Volvo drivetrain, complete with automatic traction control (ATC), including Terrain Memory*. The intelligent function identifies and remembers slippery road segments to ensure optimized traction control and outstanding off-road mobility.

* In markets with CareTrack

Total operator control

Features including hill assist, cruise control, downhill speed control, load and dump brake and dynamic Volvo Engine Brake help operators achieve optimum results all day, every day.

Lower maintenance costs

Keep service costs to a minimum thanks to simplified servicing, longer change intervals and easy component access. Servicing your machine is quick and easy thanks to industry leading service access and essential maintenance points accessible from the ground. What's more, eliminate daily or weekly greasing thanks to industry leading greasing intervals of 250 hours for maximum uptime.

Volvo A30 in detail

Engine

11 liter, 6-cylinder in line turbocharged (fixed geometry) diesel engine with 4 valves per cylinder, overhead camshaft and electronically controlled unit injectors. The engine has wet replaceable cylinder liners and replaceable valve guides and valve seats.

Engine Model		D11F
Max power - SAE J1995 Gross	kW	265
	hp	360
at engine speed	rpm	2 000
Flywheel power - ISO 9249, SAE J1349 Net	kW	264
	hp	359
at engine speed	rpm	2 000
Max torque - SAE J1995 Gross	Nm	2 040
Max torque - ISO 9249, SAE J1349 Net	Nm	2 030
at engine speed	rpm	1 200
Displacement	lit	10.8

Electrical System

All cables, sockets and pins are identified. Cables are enclosed in plastic conduits and secured to main frame. Halogen lights. Prewired for options. Connectors meet IP67 standard for water-proofing as necessary.

Voltage	V	24
Battery	V	2 x 12
Battery capacity	Ah	2 x 170
Alternator	kW/A	3.396 / 120
Starter motor	kW	9

Drivetrain

Torque converter with built-in lock-up function.
Transmission: Fully automatic Volvo PowerTronic planetary transmission with six forward gears and two reverse gears. The transmission has the ability to skip gears for fast and accurate gear selection.
Dropbox: Volvo-developed, in-line design with high ground clearance and 100% longitudinal "dog clutch" type differential lock.
Axles: Heavy duty, purpose built Volvo design with fully floating axle shafts, planetary type hub reductions and 100% dog clutch type diff-lock. Automatic traction control system (ATC).

Torque converter		2.37:1
Transmission	Volvo	PT 2116
Dropbox	Volvo	IL1 ATC
Axles	Volvo	AHW64

Brake System

Fully hydraulic, wet multiple disc brakes with enclosed, forced oil-cooled multiple discs on all wheels. Two circuit brake system. Complies with ISO 3450 at total machine weight.
Circuit division: One circuit for front axle and one for bogie axles.
Parking brake: Spring-applied disc brake acting on the trailer unit propeller shaft. When the parking brake is applied , the longitudinal differential locked.
Retarder: Service brake retarder function and Volvo Engine Brake (VEB).

Steering System

Hydro-mechanical articulated steering, self compensating design.
Two double-acting steering cylinders.
Steering angle: 3,4 steering wheel turns lock-to-lock, ±45°.
Steering system, including secondary steering fulfi lls ISO 5010.

Chassis

Frames: box type, heavy duty. High strength steel, robot welded.
Rotating hitch: 100% maintenance free, fully sealed, with permanently greased tapered roller bearings.

Cab

The Volvo cab features excellent all-around visibility created by a centrally positioned operator station, sloping hood, large rear-view mirrors and entrance camera. The one piece wide front windshield with large swipe area further enhances visibility.
The central instrument cluster, the integrated Co-pilot, gearshift lever, tipping lever and easy to reach switches ensure ease of operation.
The spacious cab meets the ROPS/FOPS safety standards according to ISO3471, SAE J1040 / ISO3449, SAE J231. Controls are ergonomically designed and easy to understand. Large storage compartments and a cooled/heated box improves the operator comfort.

Sound level in cab (ISO 6396) - L_{pA}	dB	72
External sound level (ISO 6395) - L_{WA}	dB	111
Internal sound level with sound kit	dB	70
External sound level with sound kit	dB	109

Hydraulic System		
Pumps: Four variable displacement piston pumps driven by the flywheel PTO. Two load-sensing used for steering and tipping and two electrical controlled used for fan, brake cooling and brake power supply. One ground-dependent piston pump for secondary steering mounted on the dropbox. One return oil filters with magnetic cores provide effective oil filtration.		
System max working pressure	MPa	25

Dumping System		
Patented Load and Dump Brake. **Dumping Cylinders:** two single stage double acting cylinders.		
Tipping angle	°	70
Tipping time with load	s	12
Lowering time	s	10

Body		
Plate thickness		
Front	mm	6
Sides	mm	10
Bottom	mm	14
Chute	mm	14
Material		HB450 steel
Yield strength	N/mm²	1,150
Tensile strength	N/mm²	1,350

Load Capacity		
Standard Body		
Load capacity	kg	29,000
Body, struck	m³	13.9
Body, heaped 2:1	m³	17.8
With overhung tailgate		
Body, struck	m³	14.2
Body, heaped 2:1	m³	18.4

Suspension
Front suspension: Gas-hydraulic struts. Soft and progressive. Independent wheel movement via a 3-point mounting system. **Rear suspension:** 100% maintenance free. Straddle mounted bogie beam. Independent wheel movement via a 3-point mounting system.

Specifications

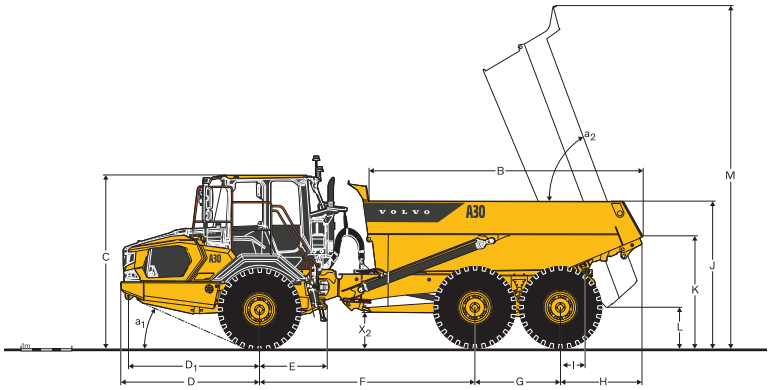

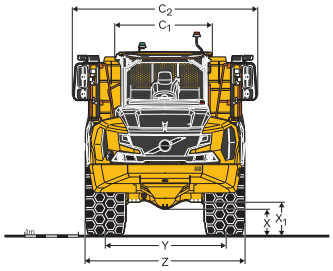

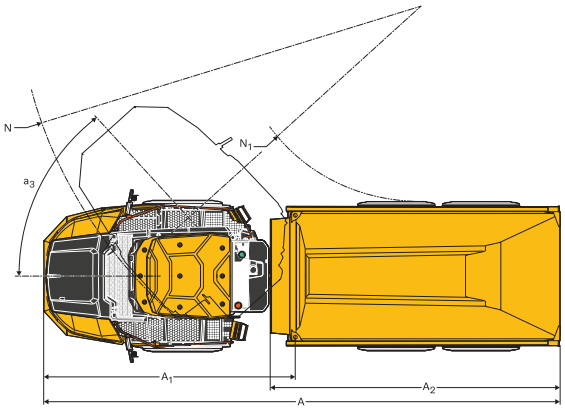

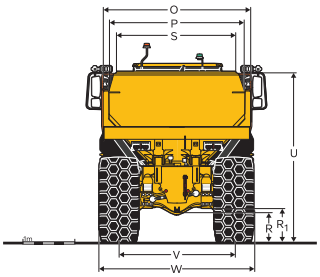

DIMENSIONS		
Pos	**Unit**	**A30J**
A	mm	10 344
A*	mm	10 436
A_1	mm	4 953
A_2	mm	5 851
B	mm	5 382
C	mm	3 406
C_1	mm	1 819
C_2	mm	3 457
D	mm	2 762
D_1	mm	2 607
E	mm	1 210
F	mm	4 264
G	mm	1 690
H	mm	1 628
I	mm	501
J	mm	2 906
K	mm	2 186
L	mm	650
M	mm	6 559
N	mm	8 175

DIMENSIONS		
Pos	**Unit**	**A30J**
N_1	mm	4 190
O	mm	2 810
O*	mm	2 978
P	mm	2 604
R	mm	527
R_1	mm	650
S	mm	2 264
U	mm	3 331
V	mm	2 216
W	mm	2 991
X	mm	475
X_1	mm	601
X_2	mm	689
Y	mm	2 216
Z	mm	2 991
a_1	°	24
a_2	°	70
a_3	°	45

A30J: Unloaded machine with 750/65R25

*Dimension with overhung tailgate

REFILL CAPACITIES		
		A30J
Crankcase	l	35
Fuel tank	l	380
Cooling system	l	-
Brake cooling system	l	52
Transmission	l	48
Dropbox	l	9.0
Axles, front/bogie	l	24 / 50
Hydraulic tank	l	170

SPEED		
		A30J
Forward		
1	km/h	8.3
2	km/h	11.9
3	km/h	21.1
4	km/h	30.3
5	km/h	38.4
6	km/h	52.7
Reverse		
1	km/h	7.7
2	km/h	13.7

OPERATING WEIGHT UNLOADED		
		A30J
Tires		**750/65R25***
Front	kg	13 400
Rear	kg	11 200
Total	kg	24 600
Payload	kg	29 000

Operating weight includes all fluids and operator

*) A30J with tires 23.5R25, decrease 200 kg / axle

TOTAL WEIGHT		
		A30J
Tires		**750/65R25***
Front	kg	15 800
Rear	kg	37 800
Total	kg	53 600

*) A30J with tires 23.5R25, decrease 200 kg / axle

GROUND PRESSURE			
		A25J	
Tires		**23.5R25**	**750/65R25**
Unloaded			
Front	kPa	131	111
Rear	kPa	52	45
Loaded			
Front	kPa	158	133
Rear	kPa	186	156

Equipment

STANDARD EQUIPMENT
Cab/Operator envioment
Operator seat with head restraint (air suspended and heated)
Electronic Climate Control
Cup holder / storage tray
Cell phone holder
Instructor seat with seat belt
Overhead console for CC Radio, Tachograph, etc.
Air suspended / heated operator seat
Sliding window
Cooled / Heated storage box
Front sun visor
Tilt/telescopic steering wheel
Loud speakers (4)
Dynamic instrument cluster and integrated Co-Pilot
Automatic pre-start checks
Troubleshooting diagnostics
Engine
Preheater for easier cold starts
VEB (exhaust retarder EPG + compression brake)
Wheels and tires
26.5R25
Drivetrain
6x4 and 6x6 Automatic Traction Control (ATC)
Dog clutch type 100% diff-locks in all axles
Cruise Control
Dropbox with longitudinal diff-lock
Torque converter with automatic lock-up in all gears
Electrical system
Battery disconnect switch
Electrical Interface
Charging studs
Power outlets
USB-C 2.0 (2)
USB-A 3.0 (1)
24V (2)
Exterior and Interior lights (all LED)
Brake system
Two circuit, fully hydraulic, wet discs on all axles (externally cooled)
Down Hill Speed Control
Hill assist
Load & Dump Brake
Retarder pedal
Parking brake on propeller shaft

STANDARD EQUIPMENT
Dumping System
Body prepared for exhaust heating and optional equipment
Safety and security
Anti-slip steps and platforms with handrails
Dump body lock
Steering joint lock
Harness anchor points
Rear-view mirrors
Retractable 3-inch 2-point safety belt
ROPS / FOPS protected Care Cab
Secondary steering
Dump support system
Positioning indicators (front and rear)
Entrance camera
Service and Maintenance
Grouped service points and filters
Electrical fuel priming pump
Prepared for fast fueling equipment
Ambient and service lights (LED)
Electrical engine hood
Belly plate with integrated service hatches
Drainage hoses
Tool box
Front service ladder

OPTIONAL EQUIPMENT
Engine
Air filter, heavy duty
Engine heater, electric
Engine heater, diesel
Engine shutdown timer
External emergency engine stop
Operator Environment
Noise reduction kit (fulfils 2000/14/EC)
Anchorage, operator's manual
Cab heating / ventilation timer
Cable kit, for cab heater
Cab air filter (Asbestos dust protection)
Cab air filter (Carbon)
Rear view mirrors, adjustable, el.heated
Sun blinds, side windows
Universal key
Premium operator seat with head restraint (air suspended, cooled / heated), 2-point belt
Premium operator seat with head restraint (air suspended, cooled / heated), 3-point belt
Armrest for operator seat
Hands-free microphone
Radio AM / FM / DAB
Wheels and tires
775/65R29
Drivetrain
Long haul kit, dropbox cooling
Speed limiter (25/30 km/h)
Electrical system
Warning beacon, LED
Seatbelt indicator, external
Working lights front and rear, LED
Rear view camera
Front view camera
Reverse alarm
PDS interface, Safemine
Tire Pressure Monitoring System

OPTIONAL EQUIPMENT
Suspension
Rubber front suspension
Hydraulic front suspension
Dumping System
Body exhaust heating
Front spillguard, extra
Side extension, 200 mm
Side extension, light material
Tailgate, overhung, wire-operated
Tailgate, overhung, linkage-operated
Tailgate, underhung
Wear plates, 450 HB
Wear plates heavy duty, 450 HB
Safety and security
Fire suppression system
Warning triangle
First aid kit and fire extinguisher
Fire extinguisher, external
Wheel chocks
Service and maintenance
Auto Lube system
Centralized greasing
Tool kit
Other
Arctic oil kit
Fast fuelling system
Jump start connector, ISO-type

Not all products are available in all markets. Under our policy of continuous improvement, we reserve the right to change specifications and design without prior notice.
The illustrations do not necessarily show the standard version of the machine.